1. ALL RESISTANCE VALUES ARE IN OHMS, 0.1 WATT +/- 5%.
2. ALL CAPACITANCE VALUES ARE IN MICROFARADS.
3. ALL CRYSTALS & OSCILLATOR VALUES ARE IN HERTZ.

SCHEM,MLB,X1190

REV	ECN	DESCRIPTION OF REVISION	CK APPD / DATE
4	0011084069	ENGINEERING RELEASED	2018-01-26

PAGE	CSA	CONTENTS	SYNC	DATE
1	1	Table of Contents	SILU	05/24/2017
2	2	BOM Configuration 1	SEAN	11/29/2017
3	3	BOM Configuration 2	SEAN	11/29/2017
4	4	PD Parts	ZIFENG_CONSTRAINTS	03/03/2017
5	5	CPU DMI/PEG/FDI/RSVD	ZIFENG	09/07/2017
6	6	CPU Clock/Misc/JTAG/CFG	j380_mlb	02/09/2017
7	7	CPU DDR4 Interfaces	j380_mlb	02/09/2017
8	8	CPU Power	ZIFENG_CONSTRAINTS	02/24/2017
9	9	CPU Ground	j380_mlb	02/09/2017
10	10	CPU Decoupling 1	SILU	03/29/2017
11	11	CPU Decoupling 2	SILU	05/24/2017
12	12	PCH RTC/CLK/ESPI/PM	ZIFENG	05/18/2017
13	13	PCH DMI/JTAG/SPI/HDA	SILU	07/27/2017
14	14	PCH PCI-E/USB	ZIFENG	05/18/2017
15	15	PCH GPIO/MISC/NCTF	ZIFENG	05/18/2017
16	16	PCH Power	ZIFENG	05/18/2017
17	17	PCH Decoupling	ZIFENG	05/18/2017
18	18	CPU/PCH Merged XDP	ZIFENG	05/24/2017
19	19	Chipset Support 1	SILU	08/09/2017
20	20	Chipset Support 2	ZIFENG	05/18/2017
21	22	DDR4 VREF Margining	j380_mlb	02/09/2017
22	23	DDR4 SDRAM Channel A 1	j380_mlb	02/09/2017
23	24	DDR4 SDRAM Channel A 2	j380_mlb	02/09/2017
24	25	DDR4 SDRAM Channel B 1	j380_mlb	02/09/2017
25	26	DDR4 SDRAM Channel B 2	j380_mlb	02/09/2017
26	27	DDR4 Termination	j380_mlb	02/10/2017
27	28	USB-C HIGH SPEED 1	J132	05/11/2017
28	29	USB-C HIGH SPEED 2	ADITYA	03/30/2017
29	30	USB-C X Support	ADITYA	04/19/2017
30	31	USB-C PORT CONTROLLER A	ZIFENG	05/26/2017
31	32	USB-C PORT CONTROLLER B	ZIFENG	05/26/2017
32	33	USB-C CONNECTOR A	SILU_J680	08/09/2017
33	34	USBC X Connector Support	ADITYA	04/05/2017
34	35	TBT 5V REGULATOR	J132	04/05/2017
35	36	WIFI/BT: Support	J132	03/29/2017
36	37	WIFI/BT: MODULE 1	METE	05/10/2017
37	38	AP & BT Conn	METE	08/11/2017
38	39	SoC GPIO/SEP/USB/DDR/Test	SILU	05/26/2017
39	40	SoC AOP/AON/SMC	SILU	03/22/2017
40	41	SoC ISP/I2C/UART/SPI/I2S	H9M and PMIC	03/02/2017
41	42	SoC PCIe	SILU	03/15/2017
42	43	SoC Power 1	SILU	04/04/2017
43	44	SoC Power 2	H9M and PMIC	03/02/2017
44	45	SoC Power 3	SILU	05/26/2017
45	46	SoC Ground	H9M and PMIC	03/02/2017
46	47	SoC Shared Support	SILU	08/09/2017
47	48	SoC Project Support	SILU	07/27/2017
48	49	MESA	SILU	05/26/2017
49	50	Secure Element	SILU	05/05/2017
50	51	DFR & T208 Support	SILU	07/27/2017
51	52	I2C Connections 1	RAYMOND	10/02/2017
52	53	I2C Connections 2	RAYMOND	10/02/2017
53	54	Power Sensors High Side	RAYMOND	10/09/2017
54	55	Power Sensors Load Side	RAYMOND	10/13/2017
55	56	Power Sensors Extended 1	RAYMOND	10/13/2017
56	57	Power Sensors Extended 2	RAYMOND	10/13/2017
57	58	Thermal Sensors	RAYMOND	06/28/2017
58	59	Power Sensor Extended 3	RAYMOND	10/13/2017
59	60	Fans/SMC/AMUX Support	RAYMOND	06/13/2017
60	62	Audio Placeholder	j132-audio	03/15/2017
61	63	Audio Jack Codec	TROY	07/24/2017
62	64	Audio Left Amplifiers	TROY	12/11/2017
63	65	Audio Right Amplifiers	TROY	12/11/2017
64	66	Audio Flex Connectors	TROY	03/22/2017
65	67	Keyboard & Trackpad 1	j132	03/23/2017
66	68	Keyboard & Trackpad 2	j132	03/23/2017
67	69	VR 3.3V G3H & Battery Conn	SILU	04/27/2017
68	70	PBUS Supply & Battery Charger	ZIFENG	05/24/2017
69	71	IMVP IC	SILU	05/24/2017
70	72	IMVP VCC Block	SILU	05/24/2017
71	73	IMVP SA Block	SILU	05/10/2017
72	74	IMVP GT Block	SILU	05/24/2017
73	76	Power - 5V 3.3V Supply	SILU	05/16/2017
74	77	VR 2.5V & 1.2V/VTT	SILU	05/01/2017
75	78	PMIC BUCKS AND SWs	SILU	06/06/2017
76	79	PMIC LDOs	SILU	07/10/2017
77	80	PMIC GPIOs & Control	SILU	07/27/2017
78	81	VR VCCIO	SILU	05/10/2017
79	82	Power FETs	SILU	06/27/2017
80	83	SOC/PMIC Aliases	SILU	08/09/2017
81	84	LCD Backlight Driver	RAYMOND	08/07/2017
82	85	eDP Display Connector	SEAN	08/09/2017
83	86	SSD0 S4E 0	j137_gs5_redhead	01/26/2017
84	87	SSD0 S4E 1	j137_gs5_redhead	01/26/2017
85	88	SSD0 S4E 2	j137_gs5_redhead	01/26/2017
86	89	SSD0 S4E 3	j137_gs5_redhead	01/26/2017
87	90	SSD0 PMIC & VR	j137_gs5_redhead	01/26/2017
88	91	SSD1 S4E 0	j137_gs5_redhead	01/26/2017
89	92	SSD1 S4E 1	j137_gs5_redhead	01/26/2017
90	93	SSD1 S4E 2	j137_gs5_redhead	01/26/2017
91	94	SSD1 S4E 3		
92	95	SSD1 PMIC & VR		
93	98	EDP Mux	SEAN	05/01/2017
94	99	GPU PCC	SEAN	11/09/2017
95	100	GPU Baffin PCIe	SEAN	11/09/2017
96	101	GPU Baffin Core/FB Power	SEAN	06/21/2017
97	102	GPU Baffin FB	SEAN	04/19/2017
98	103	VR 1.05V GPU & 1.35V FB	SILU	04/27/2017
99	104	GDDR5 VRAM FB 1 [104]	SEAN	04/19/2017
100	105	GDDR5 VRAM FB 2	SEAN	04/19/2017
101	106	VR GPU Core	SILU	05/24/2017
102	107	GPU Baffin GPIO/CLK/Straps	SEAN	04/19/2017
103	108	GPU Baffin DP/GPIO	SILU	07/27/2017
104	109	GPU Baffin VSS/Misc	SEAN	11/09/2017
105	110	USB-C HIGH SPEED 1	J132	05/11/2017
106	111	USB-C HIGH SPEED 2	ADITYA	04/03/2017
107	112	USB-C T Support	ADITYA	04/19/2017
108	113	USB-C PORT CONTROLLER A	ZIFENG	05/26/2017
109	114	USB-C PORT CONTROLLER B	ZIFENG	05/26/2017
110	115	USB-C CONNECTOR A	SILU_J680	08/09/2017
111	116	USBC T Connector Support	ADITYA	04/05/2017
112	117	USB-C T 5V VR	SILU	05/11/2017
113	118	GDDR5 VRAM FB 3	j680_copy	02/01/2017
114	119	GDDR5 VRAM FB 4	j680_copy	02/01/2017
115	120	Power Alias 1	SILU	05/01/2017
116	121	Power Alias 2	SILU	06/27/2017
117	122	Signal Alias	METE	05/10/2017
118	123	High speed No Testpoints	RAYMOND	06/02/2017
119	124	DFU TEST POINTS	RAYMOND	08/07/2017
120	125	FCT TESTPOINTS 2	RAYMOND	08/07/2017
121	126	ICT, MAC-1 ,EE Testpoints	RAYMOND	08/31/2017
122	127	Desense Caps 1	SEAN	06/27/2017
123	128	Desense Caps 2	j380_mlb	02/09/2017
124	129	Desense Caps 3	blah	06/27/2017
125	130	Memory Bite/Byte Swizzle	j380_mlb	02/09/2017
126	140	Dev Support	Debug	05/03/2017
127	141	BOM-639 2.2GHz	SEAN	11/29/2017
128	143	BOM-639 2.6GHz	j380_mlb	02/09/2017
129	144	BOM-639 2.9GHz	j380_mlb	02/09/2017
130	147	BOM Alt Table	SEAN	11/29/2017
131	200	Dev Support	ADITYA	03/22/2017

LAST_MODIFICATION=Fri Jan 26 13:24:05 2018

LAST_MODIFICATION=Fri Jan 26 13:24:05 2018

LAST_MODIFICATION=Fri Jan 26 13:24:05 2018

DRAWING
TITLE=MLB
ABBREV=ABBREV
LAST_MODIFIED=Fri Jan 26 13:24:05 2018

Schematic / PCB #'s

PART NUMBER	QTY	DESCRIPTION	REFERENCE DES	CRITICAL	BOM OPTION

DRAWING TITLE: SCHEM,MLB,X1190

Apple Inc.

DRAWING NUMBER: 051-02643 | SIZE: D
REVISION: 4.0.0
BRANCH: evt-0
PAGE: 1 OF 200
SHEET: 1 OF 131

NOTICE OF PROPRIETARY PROPERTY:
THE INFORMATION CONTAINED HEREIN IS THE PROPRIETARY PROPERTY OF APPLE INC.
THE POSESSOR AGREES TO THE FOLLOWING:
I TO MAINTAIN THIS DOCUMENT IN CONFIDENCE
II NOT TO REPRODUCE OR COPY IT
III NOT TO REVEAL OR PUBLISH IT IN WHOLE OR PART
IV ALL RIGHTS RESERVED

X1190 BOM Groups

BOM GROUP	BOM OPTIONS
X1190_8L	ALTERNATE,S4E_L5,S4E_L6,S4E_L7,S4E_L8,OCARINA_2,S4E_X4PLUS,S4E_X8
X1190_6L	ALTERNATE,S4E_L5,S4E_L6,OCARINA_2,S4E_X4PLUS,S4E_X6
X1190_COMMON	SCH,PCB,COMMON,ALTERNATE,X1190_COMMON1,X1190_COMMON2,X1190_PROGPARTS,VRAM_ALTS
X1190_COMMON1	CPUPEG:X8X4X4,EDP:YES,BOARD_ID,BOARD_REV:011,SE:PROD_2017,EN_VP0R_LPS:YES
X1190_COMMON2	SKIP_5V3V3:AUDIBLE,XDP:YES,SYSDET:FET,VCCSPI:3V3,OCARINA_I2C:1K,SVID_PU:CORE,RF_TUNING,PBUS:3S
X1190_PROGPARTS	UPCROM_PROG:P1,WIFI_ROM:P0,BT_ROM:P2
X1190_SNS	LOADISNS,LOADRC:YES,SENSOR:DEV
X1190_DEVEL:ENG	ALTERNATE,X1190_SNS,DBGLED,XDP_CONN,USBC_DBG,DBG_BTN,WIFI_DBG,DBG_FAN,GPUROM:BLANK,VITAMIN-C:YES,PCC:YES,GPU_ROM:YES,BOOTCFG0
X1190_DEVEL:DVT	ALTERNATE,LOADRC:NO
X1190_DEVEL:PVT	ALTERNATE,LOADRC:NO

BOM Variants

BOM NUMBER	BOM NAME	BOM OPTIONS
685-00179	COMMON PARTS,MLB,X1190	X1190_COMMON
685-00193	S4E 8L Parts,MLB,X1190	X1190_8L
685-00198	S4E 6L Parts,MLB,X1190	X1190_6L
985-00362	DEV,MLB,X1190	X1190_DEVEL:ENG

PART NUMBER	QTY	DESCRIPTION	REFERENCE DES	CRITICAL	BOM OPTION
685-00179	1	COMMON PARTS, MLB, X1190	BASE	CRITICAL	BASE_BOM
685-00193	1	S4E 8L PARTS (8L),MLB,X1190	8L	CRITICAL	BOM_8L
985-00362	1	DEV PARTS,MLB,X1190	DEVEL	CRITICAL	DEVEL_BOM
685-00198	1	S4E 6L PARTS (6L),MLB,X1190	6L	CRITICAL	BOM_6L

DRAM Options

BOM GROUP	BOM OPTIONS
MC_32G	32G_MICRON_2400,RAMCFG4:L,RAMCFG3:L,RAMCFG2:L,RAMCFG1:L
HY_32G	32G_HYNIX_2400,RAMCFG4:L,RAMCFG3:L,RAMCFG2:L,RAMCFG1:L,RAMCFG0:L
HY_16G	16G_HYNIX_2400,RAMCFG4:L,RAMCFG3:L,RAMCFG1:L,RAMCFG0:L
MC_16G	16G_MICRON_2400,RAMCFG4:L,RAMCFG3:L,RAMCFG1:L

S4E Options

BOM GROUP	BOM OPTIONS
TS_256_PMLC	S4E_256_TB,SOC:1GB,SSD0_NAND_VCC:2.5V
WD_256_PMLC	S4E_256_WD,SOC:1GB,SSD0_NAND_VCC:2.5V
TS_512_PMLC	S4E_512_TB,SOC:1GB,SSD0_NAND_VCC:2.5V
WD_512_PMLC	S4E_512_WD,SOC:1GB,SSD0_NAND_VCC:2.5V
TS_1TB_PMLC	S4E_1TB_TB,SOC:2GB,SSD0_NAND_VCC:2.5V,SSD1_NAND_VCC:2.5V
WD_1TB_PMLC	S4E_1TB_WD,SOC:2GB,SSD0_NAND_VCC:2.5V,SSD1_NAND_VCC:2.5V
TS_2TB_PMLC	S4E_2TB_TB,SOC:2GB,SSD0_NAND_VCC:2.5V,SSD1_NAND_VCC:2.5V
WD_2TB_PMLC	S4E_2TB_WD,SOC:2GB,SSD0_NAND_VCC:2.5V,SSD1_NAND_VCC:2.5V
SM_2TB_3DV4	S4E_2TB_SM,SOC:2GB,SSD0_NAND_VCC:2.5V,SSD1_NAND_VCC:2.5V
SM_4TB_3DV4	S4E_4TB_SM,SOC:2GB,SSD0_NAND_VCC:2.5V,SSD1_NAND_VCC:2.5V
TS_2TB_TLC	TLC_2TB_TB,SOC:2GB,SSD0_NAND_VCC:2.5V,SSD1_NAND_VCC:2.5V
WD_2TB_TLC	TLC_2TB_WD,SOC:2GB,SSD0_NAND_VCC:2.5V,SSD1_NAND_VCC:2.5V

BOARD ID

BOM GROUP	BOM OPTIONS
BOARD_ID	BOARDID0,BOARDID1,BOARDID3

VRAM ALT BOM GROUPS

BOM NUMBER	BOM NAME	BOM OPTIONS
685-00221	VRAM PARTS,HYNIX,2X,MLB,X1190	FB_4GB_HYNIX
685-00222	VRAM PARTS,MICRON,2X,MLB,X1190	FB_4GB_MICRON
685-00223	VRAM PARTS,SAMSUNG,2X,MLB,X1190	FB_4GB_SAMSUNG
685-00224	VRAM PARTS,HYNIX,1Z,MLB,X1190	FB_4GB_HYNIX_1Z
685-00225	VRAM PARTS,MICRON,1Z,MLB,X1190	FB_4GB_MICRON_1Z

VRAM SUB-BOM

PART NUMBER	QTY	DESCRIPTION	REFERENCE DES	CRITICAL	BOM OPTION
685-00221	1	VRAM PARTS,HYNIX,2X,MLB,X1190	VRAMSSSS	CRITICAL	VRAM_ALTS

VINAFIX.COM

SYNC_MASTER=SEAN SYNC_DATE=11/29/2017

PAGE TITLE

BOM Configuration 1

Apple Inc.

DRAWING NUMBER 051-02643 SIZE D

REVISION 4.0.0

BRANCH evt-0

PAGE 2 OF 200

SHEET 2 OF 131

NOTICE OF PROPRIETARY PROPERTY:
THE INFORMATION CONTAINED HEREIN IS THE PROPRIETARY PROPERTY OF APPLE INC.
THE POSESSOR AGREES TO THE FOLLOWING:
I TO MAINTAIN THIS DOCUMENT IN CONFIDENCE
II NOT TO REPRODUCE OR COPY IT
III NOT TO REVEAL OR PUBLISH IT IN WHOLE OR PART
IV ALL RIGHTS RESERVED

GPU Baffin

PART NUMBER	QTY	DESCRIPTION	REFERENCE DES	CRITICAL	BOM OPTION
337S00493	1	GPU,AMD,BAFFIN,ULX,A3,0.83,QS,BGA769	UA000	CRITICAL	BAFFIN_ULX
337S00494	1	GPU,AMD,BAFFIN,PROX,A3,0.83,QS,BGA769	UA000	CRITICAL	BAFFIN_PROX
998-04866	1	INTERPOSER,AMD,C989,BGA769,VDDCI/MVDD	UA000	CRITICAL	STARDUST:VDDCI_MVDD
998-04867	1	INTERPOSER,AMD,C988,BGA769,VDDC	UA000	CRITICAL	STARDUST:VDDC

FB VDRAM Parts

PART NUMBER	QTY	DESCRIPTION	REFERENCE DES	CRITICAL	BOM OPTION
333S00074	4	IC,GDDR5,8Gb,7Gbps,1.5V,25NM,B,170 BGA	UA400,UA450,UA500,UA550	CRITICAL	FB_4GB_SAMSUNG
333S00075	4	IC,GDDR5,8Gb,7Gbps,1.5V,25NM,A,170 BGA	UA400,UA450,UA500,UA550	CRITICAL	FB_4GB_MICRON
333S00100	4	IC,GDDR5,8Gb,7Gbps,1.5V,25NM,A,170 BGA	UA400,UA450,UA500,UA550	CRITICAL	FB_4GB_HYNIX
333S00173	4	IC,GDDR5,8Gb,7Gbps,1.5V,1ZNM,A,170 BGA	UA400,UA450,UA500,UA550	CRITICAL	FB_4GB_MICRON_1Z
333S00175	4	IC,GDDR5,8Gb,7Gbps,1.5V,1ZNM,A,170 BGA	UA400,UA450,UA500,UA550	CRITICAL	FB_4GB_HYNIX_1Z

CPU Parts CFL (Needs to be updated)

PART NUMBER	QTY	DESCRIPTION	REFERENCE DES	CRITICAL	BOM OPTION
337S00509	1	CPU,CFLH,QP87,QS,U0,2.2,45W,1.1,LGA1440	U0500	CRITICAL	CPU_CFL:2.2
337S00510	1	CPU,CFL-H,QP86,QS,U0,2.6,6C,45W,1.15,BGA1440	U0500	CRITICAL	CPU_CFL:2.6
337S00513	1	CPU,CFL-H,QPQG,QS,U0,2.9,6C,45W,1.2,BGA1440	U0500	CRITICAL	CPU_CFL:2.9
998-12472	1	INTERPOSER,CFH-H,BGA1440	U0500	CRITICAL	CPU_SKL:SOCKET

Main DRAM Parts

PART NUMBER	QTY	DESCRIPTION	REFERENCE DES	CRITICAL	BOM OPTION
333S00131	16	IC,SDRAM,DDR4-2400,16GBIT,20NM,BGA78	U2300,U2310,U2320,U2330,U2400,U2410,U2420,U2430,U2500,U2510,U2520,U2530,U2600,U2610,U2620,U2630	CRITICAL	32G_MICRON_2400
333S00134	16	IC,SDRAM,DDR4-2400,16GBIT,20NM,BGA78	U2300,U2310,U2320,U2330,U2400,U2410,U2420,U2430,U2500,U2510,U2520,U2530,U2600,U2610,U2620,U2630	CRITICAL	32G_HYNIX_2400
333S00147	16	IC,SDRAM,DDR4-2400,8GBIT,20NM,BGA78	U2300,U2310,U2320,U2330,U2400,U2410,U2420,U2430,U2500,U2510,U2520,U2530,U2600,U2610,U2620,U2630	CRITICAL	16G_HYNIX_2400
333S00163	16	IC,SDRAM,DDR4-2400,8GBIT,20NM,BGA78	U2300,U2310,U2320,U2330,U2400,U2410,U2420,U2430,U2500,U2510,U2520,U2530,U2600,U2610,U2620,U2630	CRITICAL	16G_MICRON_2400

PCH CNL-H (Needs to be updated)

PART NUMBER	QTY	DESCRIPTION	REFERENCE DES	CRITICAL	BOM OPTION
337S00523	1	IC,CNL,PCH-H,USFF,QNYP,QS,B0,BGA499	U1200	CRITICAL	

ACE & Ridges (Needs to Be Updated)

PART NUMBER	QTY	DESCRIPTION	REFERENCE DES	CRITICAL	BOM OPTION
353S01442	4	IC,CD3215,ACE,C0,USB PWR SW,BLNK,BGA96	U3100,U3200,UB300,UB400	CRITICAL	
338S00408	2	IC,TBT,TITAN RIDGE DP,QUJK,QS,C1,CSP337	U2800,UB000	CRITICAL	

Hall Effect AMR

PART NUMBER	QTY	DESCRIPTION	REFERENCE DES	CRITICAL	BOM OPTION
677-10608	2	SUBASSY T&00 PCBA, AMR, INTERPOSER, X1190	J4800,J4801	CRITICAL	

Power Controllers

PART NUMBER	QTY	DESCRIPTION	REFERENCE DES	CRITICAL	BOM OPTION
353S01525	1	IC,ISL9240HIB1Z,PMU,SOUNA,WCSP40,2.1X3.3MM	U7000	CRITICAL	
338S00267	1	IC,PMU,P650839,7X7MM.BGA168	U7800	CRITICAL	
353S01229	1	IC,SUPPLY,INTERSIL,ISL6277AHRZ,SVI2.0,QFN48	UA600	CRITICAL	
353S00928	1	IC,ISL95828A,IMVP8 CPU REG,QFN48,6X6MM	U7100	CRITICAL	

Harpoon

PART NUMBER	QTY	DESCRIPTION	REFERENCE DES	CRITICAL	BOM OPTION
339S00458	1	IC,MODULE,WIFI/BT,MURATA,HARPOON,M,ES7.7,LGA385	U3730	CRITICAL	

PART NUMBER	ALTERNATE FOR PART NUMBER	BOM OPTION	REF DES	COMMENTS:
339S00428	339S00458		ALL	IC,MODULE,WIFI/BT,HARPOON,USI,ES7.5,LGA385

USB-C Connector

PART NUMBER	QTY	DESCRIPTION	REFERENCE DES	CRITICAL	BOM OPTION
998-12556	2	CONN,RCPT,56+4,P=0.35,H=0.7,SHLD,THKR	J3300,JB500	CRITICAL	

Ocarina

PART NUMBER	QTY	DESCRIPTION	REFERENCE DES	CRITICAL	BOM OPTION
338S00410	1	IC,PMU,OCARINA,D2499A0,OTP-AG,WLCSP56	U9000	CRITICAL	
338S00410	1	IC,PMU,OCARINA,D2499A0,OTP-AG,WLCSP56	U9500	CRITICAL	OCARINA_2

Programmable Parts

PART NUMBER	QTY	DESCRIPTION	REFERENCE DES	CRITICAL	BOM OPTION	
335S00199	1	IC,1Mbit SERIAL FLASH 2X3X0.6MM UFDFPN8 PKG	UA701	CRITICAL	GPUROM:BLANK	
341S01017	1	T29,TR1(V2.1),NEW-PROTO-2,X1190	U2890	CRITICAL	UPCROM_PROG:P1	Updated-P1
341S01018	1	T29,TR2(V2.1),NEW-PROTO-2,X1190	UB090	CRITICAL	UPCROM_PROG:P1	Updated-P1
341S01025	1	IC, BT ROM, EVT,VXX, X1190	U3750	CRITICAL	BT_ROM:P2	Updated
341S00725	1	IC, WIFI ROM, PROTO0, X1190	U3710	CRITICAL	WIFI_ROM:P0	Updated

H9M

PART NUMBER	QTY	DESCRIPTION	REFERENCE DES	CRITICAL	BOM OPTION
339S00373	1	POP,GIBRALTAR+2GB 21NM,H,B0,SCK,CSP1406	U3900	CRITICAL	SOC:2GB

PART NUMBER	ALTERNATE FOR PART NUMBER	BOM OPTION	REF DES	COMMENTS:
339S00373	339S00372		ALL	2GB,20NM,M,B0,SCK,CSP1406
339S00378	339S00372		ALL	2GB,21NM,H,B0,ATK,CSP1406
339S00377	339S00372		ALL	2GB,20NM,M,B0,ATK,CSP1406

PART NUMBER	QTY	DESCRIPTION	REFERENCE DES	CRITICAL	BOM OPTION
339S00376	1	POP,GIBRALTAR+1GB 21NM,H,B0,ATK,CSP1406	U3900	CRITICAL	SOC:1GB

PART NUMBER	ALTERNATE FOR PART NUMBER	BOM OPTION	REF DES	COMMENTS:
339S00375	339S00376		ALL	1GB,20NM,M,B0,ATK,CSP1406
339S00371	339S00376		ALL	1GB,21NM,H,B0,SCK,CSP1406
339S00370	339S00376		ALL	1GB,21NM,M,B0,SCK,CSP1406

S4E Parts

256GB

335S00324	4	NAND,3DV3,85GBP,XXX,S4E,170G,SD,ULGA110	U8600,U8700,U8800,U8900	CRITICAL	S4E_256_WD
998-12418	4	NAND,3DV3,85GBP,S4E,170G,T,SUBX,ULGA110	U8600,U8700,U8800,U8900	CRITICAL	S4E_256_TB

998-12419	998-12418		ALL	SUBW

512GB

335S00325	4	NAND,3DV3,128GBP,XXX,S4E,170G,SD,ULGA110	U8600,U8700,U8800,U8900	CRITICAL	S4E_512_WD
998-12420	4	NAND,3DV3,128GBP,S4E,170G,T,SUBX,ULGA110	U8600,U8700,U8800,U8900	CRITICAL	S4E_512_TB

998-12421	998-12420		ALL	SUBW

1TB

335S00326	6	NAND,3DV3,170GBP,XXX,S4E,170G,SD,ULGA110	U8600,U8700,U8800,U8900,U9100,U9200	CRITICAL	S4E_1TB_WD
998-12422	6	NAND,3DV3,170GBP,S4E,170G,T,SUBX,ULGA110	U8600,U8700,U8800,U8900,U9100,U9200	CRITICAL	S4E_1TB_TB

998-12423	998-12422		ALL	SUBW

2TB

335S00327	8	NAND,3DV3,256GBP,XXX,S4E,170G,SD,ULGA110	U8600,U8700,U8800,U8900,U9100,U9200,U9300,U9400	CRITICAL	S4E_2TB_WD
335S00321	8	NAND,3DV4,256GBP,XXX,S4E,256G,SS,ULGA110	U8600,U8700,U8800,U8900,U9100,U9200,U9300,U9400	CRITICAL	S4E_2TB_SM
998-12424	8	NAND,3DV3,256GBP,S4E,170G,T,SUBX,ULGA110	U8600,U8700,U8800,U8900,U9100,U9200,U9300,U9400	CRITICAL	S4E_2TB_TB

998-12426	998-12424		ALL	SUBW

4TB

335S00322	8	NAND,3DV4,512GBP,S4E,256G,SS,ULGA110	U8600,U8700,U8800,U8900,U9100,U9200,U9300,U9400	CRITICAL	S4E_4TB_SM

2TB TLC

335S00228	8	NAND,3DV3,256GBT,S4E,256G,T,SLGA110	U8600,U8700,U8800,U8900,U9100,U9200,U9300,U9400	CRITICAL	TLC_2TB_TB
335S00247	8	NAND,3DV3,256GBT,S4E,256G,SD,SLGA110	U8600,U8700,U8800,U8900,U9100,U9200,U9300,U9400	CRITICAL	TLC_2TB_WD

PAGE TITLE
BOM Configuration 2

Apple Inc.

DRAWING NUMBER 051-02643 SIZE D
REVISION 4.0.0
BRANCH evt-0

NOTICE OF PROPRIETARY PROPERTY:
THE INFORMATION CONTAINED HEREIN IS THE PROPRIETARY PROPERTY OF APPLE INC.
THE POSESSOR AGREES TO THE FOLLOWING:
I TO MAINTAIN THIS DOCUMENT IN CONFIDENCE
II NOT TO REPRODUCE OR COPY IT
III NOT TO REVEAL OR PUBLISH IT IN WHOLE OR PART
IV ALL RIGHTS RESERVED

Pogo Pins

APN 870-01771
PG0410
POGO-2.30D-4.63H-SM
SM

PG0411
POGO-2.30D-4.63H-SM
SM

PG0420
POGO-2.30D-4.63H-SM
SM

PG0421
POGO-2.30D-4.63H-SM
SM

PG0430
POGO-2.30D-4.63H-SM
SM

PG0471
POGO-2.30D-4.63H-SM
SM

PG0470
POGO-2.30D-4.63H-SM
SM

APN 870-01772
PG0400
POGO-2.30D-4.06H-SM
SM

PG0401
POGO-2.30D-4.63H-SM
SM

Dummy Parts to act as bumpers

C0402
1UF
10% 6.3V CERM 402
OUTLIS_MUST-TERMINATED

C0403
1UF
10% 6.3V CERM 402
OUTLIS_MUST-TERMINATED

C0404
1UF
10% 6.3V CERM 402
OUTLIS_MUST-TERMINATED

C0405
1UF
10% 6.3V CERM 402
OUTLIS_MUST-TERMINATED

C0406
1UF
10% 6.3V CERM 402
OUTLIS_MUST-TERMINATED

SMT Bosses

APN 860-00392
BS0400
3.40D1.75ID-1.12H-SM
USB-C Left
BOT side - North

BS0410
3.40D1.75ID-1.12H-SM
USB-C Right
BOT side - North

APN 806-06520
BS0420
3.40D1.75ID-1.45H-SM
DFR Touch
BOT side

APN 806-06521
BS0430
3.40D1.75ID-1.9H-SM
DFR Display
BOT side - Left

BS0450
3.40D1.75ID-1.9H-SM
Trackpad
BOT side - Left

APN 860-00469
BS0470
2.7X1.8R-1.4ID-0.91H-SM
eDP
TOP side - Left

APN 806-07958
TOUCH-COWLING-HOOK-X378
BS0472
SM
DFR Touch - TOP side

BS0401
3.40D1.75ID-1.12H-SM
USB-C Left
BOT side - South

BS0411
3.40D1.75ID-1.12H-SM
USB-C Right
BOT side - South

APN 806-06600
BS0480
3.40D1.75ID-2.12H-SM
USB-C Right
BOT side - Left

BS0431
3.40D1.75ID-1.9H-SM
DFR Display
BOT side - Right

BS0441
3.40D1.75ID-1.9H-SM
Keyboard
BOT side - Right

BS0471
2.7X1.8R-1.4ID-0.91H-SM
eDP
TOP side - Right

Rubber Mount

Standoffs

APN 860-00452
BM0400
3.090D1.4ID-3.25H-SM
OMIT_TABLE

APN 860-00435
BM0401
2.80D1.2ID-1.55H-SM
OMIT_TABLE

BM0402
2.80D1.2ID-1.55H-SM
OMIT_TABLE

BM0403
2.80D1.2ID-1.55H-SM
OMIT_TABLE

BM0404
2.80D1.2ID-1.55H-SM
OMIT_TABLE

BM0405
2.80D1.2ID-1.55H-SM
OMIT_TABLE

BM0483
2.80D1.2ID-1.55H-SM
OMIT_TABLE

APN 860-00500
BM0488
2.80D1.2ID-3.5H-SM
OMIT_TABLE

APN 860-00500
BM0484
2.80D1.2ID-3.5H-SM
OMIT_TABLE

BM0411
2.80D1.2ID-1.55H-SM
OMIT_TABLE

BM0406
2.80D1.2ID-1.55H-SM
OMIT_TABLE

BM0407
2.80D1.2ID-1.55H-SM
OMIT_TABLE

BM0408
2.80D1.2ID-1.55H-SM
OMIT_TABLE

BM0409
2.80D1.2ID-1.55H-SM
OMIT_TABLE

BM0410
2.80D1.2ID-1.55H-SM
OMIT_TABLE

APN 860-00500
BM0485
2.80D1.2ID-3.5H-SM

BM0486
2.80D1.2ID-3.5H-SM
OMIT_TABLE

BM0487
2.80D1.2ID-3.5H-SM
OMIT_TABLE

Diplexer Can
SH0400
SM
OMIT_TABLE
SHIELD-DIPLEX-BLACK-X378A-X1099

NAND L5/L6
OMIT_TABLE
SH0402
SM
SH0401
SM
OMIT_TABLE
SHIELD-DIPLEX-BLACK-X378A-X1099
SHIELD-DIPLEX-BLACK-X378A-X1099

NAND L7/L8
OMIT_TABLE
SH0404
SM
SH0403
SM
OMIT_TABLE
SHIELD-DIPLEX-BLACK-X378A-X1099
SHIELD-DIPLEX-BLACK-X378A-X1099

H9M
SH0405
SM
OMIT_TABLE
SHIELD-DIPLEX-BLACK-X378A-X1099

VRAM
SH0406
SM
OMIT_TABLE
SHIELD-DIPLEX-BLACK-X378A-X1099

TR RT
OMIT_TABLE
SH0407
SM
SHIELD-DIPLEX-BLACK-X378A-X1099

NAND Right
OMIT_TABLE
SH0408
SM
SH0409
SM
OMIT_TABLE
SHIELD-DIPLEX-BLACK-X378A-X1099
SHIELD-DIPLEX-BLACK-X378A-X1099

TR LT
SH0410
SM
OMIT_TABLE
SHIELD-DIPLEX-BLACK-X378A-X1099

DRAM
OMIT_TABLE
SH0411
SM
SH0412
SM
OMIT_TABLE
SHIELD-DIPLEX-BLACK-X378A-X1099
SHIELD-DIPLEX-BLACK-X378A-X1099

CPU/GPU Sleds
OMIT_TABLE
SH0413
SM
SH0414
SM
OMIT_TABLE
SHIELD-DIPLEX-BLACK-X378A-X1099
SHIELD-DIPLEX-BLACK-X378A-X1099

Shield Can TH
APN 998-2691

DRAM
TH0402
TH-NSP
SL-1.2X0.4-1.5X0.7
TH0400
TH-NSP
SL-1.2X0.4-1.5X0.7
TH0403
TH-NSP
SL-1.2X0.4-1.5X0.7
TH0401
TH-NSP
SL-1.2X0.4-1.5X0.7

VRAM
TH0460
TH-NSP
SL-1.2X0.4-1.5X0.7
TH0461
TH-NSP
SL-1.2X0.4-1.5X0.7

SSD Right
TH0450
TH-NSP
SL-1.2X0.4-1.5X0.7
TH0440
TH-NSP
SL-1.2X0.4-1.5X0.7
TH0451
TH-NSP
SL-1.2X0.4-1.5X0.7
TH0441
TH-NSP
SL-1.2X0.4-1.5X0.7

SSD Left
TH0413
TH-NSP
SL-1.2X0.4-1.5X0.7
TH0412
TH-NSP
SL-1.2X0.4-1.5X0.7
TH0417
TH-NSP
SL-1.2X0.4-1.5X0.7
TH0414
TH-NSP
SL-1.2X0.4-1.5X0.7
TH0407
TH-NSP
SL-1.2X0.4-1.5X0.7
TH0416
TH-NSP
SL-1.2X0.4-1.5X0.7
TH0415
TH-NSP
SL-1.2X0.4-1.5X0.7
TH0406
TH-NSP
SL-1.2X0.4-1.5X0.7

H9M
TH0409
TH-NSP
SL-1.2X0.4-1.5X0.7
TH0408
TH-NSP
SL-1.2X0.4-1.5X0.7

TBT Left
TH0410
TH-NSP
SL-1.2X0.4-1.5X0.7
TH0411
TH-NSP
SL-1.2X0.4-1.5X0.7

TBT Right
TH0420
TH-NSP
SL-1.2X0.4-1.5X0.7
TH0421
TH-NSP
SL-1.2X0.4-1.5X0.7

OMIT_TABLE
SH0415
SM
OMIT_TABLE
SH0416
SM
SHIELD-DIPLEX-BLACK-X378A-X1099
SHIELD-DIPLEX-BLACK-X378A-X1099

Bumpers

PART NUMBER	QTY	DESCRIPTION	REFERENCE DES	CRITICAL	BOM OPTION
860-00986	1	bumper 1	BM0411	CRITICAL	
860-00948	1	bumper 2	BM0400	CRITICAL	
860-00954	5	bumper 3	BM0484,BM0485,BM0486,BM0487,BM0488	CRITICAL	
860-00949	11	bumper 4	BM0401,BM0402,BM0403,BM0404,BM0405,BM0407,BM0406,BM0408,BM0409,BM0410,BM0483	CRITICAL	

Shield Cans

PART NUMBER	QTY	DESCRIPTION	REFERENCE DES	CRITICAL	BOM OPTION
806-11170	1	SHIELD,FENCE,DIPLEX,X1181	SH0400	CRITICAL	
806-13323	2	SHIELD,FENCE,NAND_L5_L6,X1181	SH0401,SH0402	CRITICAL	S4E_X6
806-13323	4	SHIELD,FENCE,NAND_L5_L6_L7_L8,X1181	SH0401,SH0402,SH0403,SH0404	CRITICAL	S4E_X8
806-13325	1	SHIELD,FENCE,H9M,X1181	SH0405	CRITICAL	
806-13326	1	SHIELD,FENCE,VRAM,X1181	SH0406	CRITICAL	
806-13327	1	SHIELD,FENCE,TR,RT,X1181	SH0407	CRITICAL	
806-13328	2	SHIELD,FENCE,NAND_L1_L2_L3_L4,X1181	SH0408,SH0409	CRITICAL	
806-13329	1	SHIELD,FENCE,TR,LT,X1181	SH0410	CRITICAL	
806-13324	2	SHIELD,FENCE,DRAM,X1181	SH0411,SH0412	CRITICAL	
806-13996	2	SHIELD,SLED,GPU,X1181	SH0413,SH0415	CRITICAL	
806-13997	2	SHIELD,SLED,CPU,X1181	SH0414,SH0416	CRITICAL	

BOM_COST_GROUP=MECHANICALS

SYNC_MASTER=ZIFENG_CONSTRAINTS SYNC_DATE=03/03/2017

PAGE TITLE
PD Parts

Apple Inc.

DRAWING NUMBER 051-02643 SIZE D
REVISION 4.0.0
BRANCH evt-0
PAGE 4 OF 200
SHEET 4 OF 131

NOTICE OF PROPRIETARY PROPERTY:
THE INFORMATION CONTAINED HEREIN IS THE PROPRIETARY PROPERTY OF APPLE INC.
THE POSESSOR AGREES TO THE FOLLOWING:
I TO MAINTAIN THIS DOCUMENT IN CONFIDENCE
II NOT TO REPRODUCE OR COPY IT
III NOT TO REVEAL OR PUBLISH IT IN WHOLE OR PART
IV ALL RIGHTS RESERVED

VINAFIX.COM

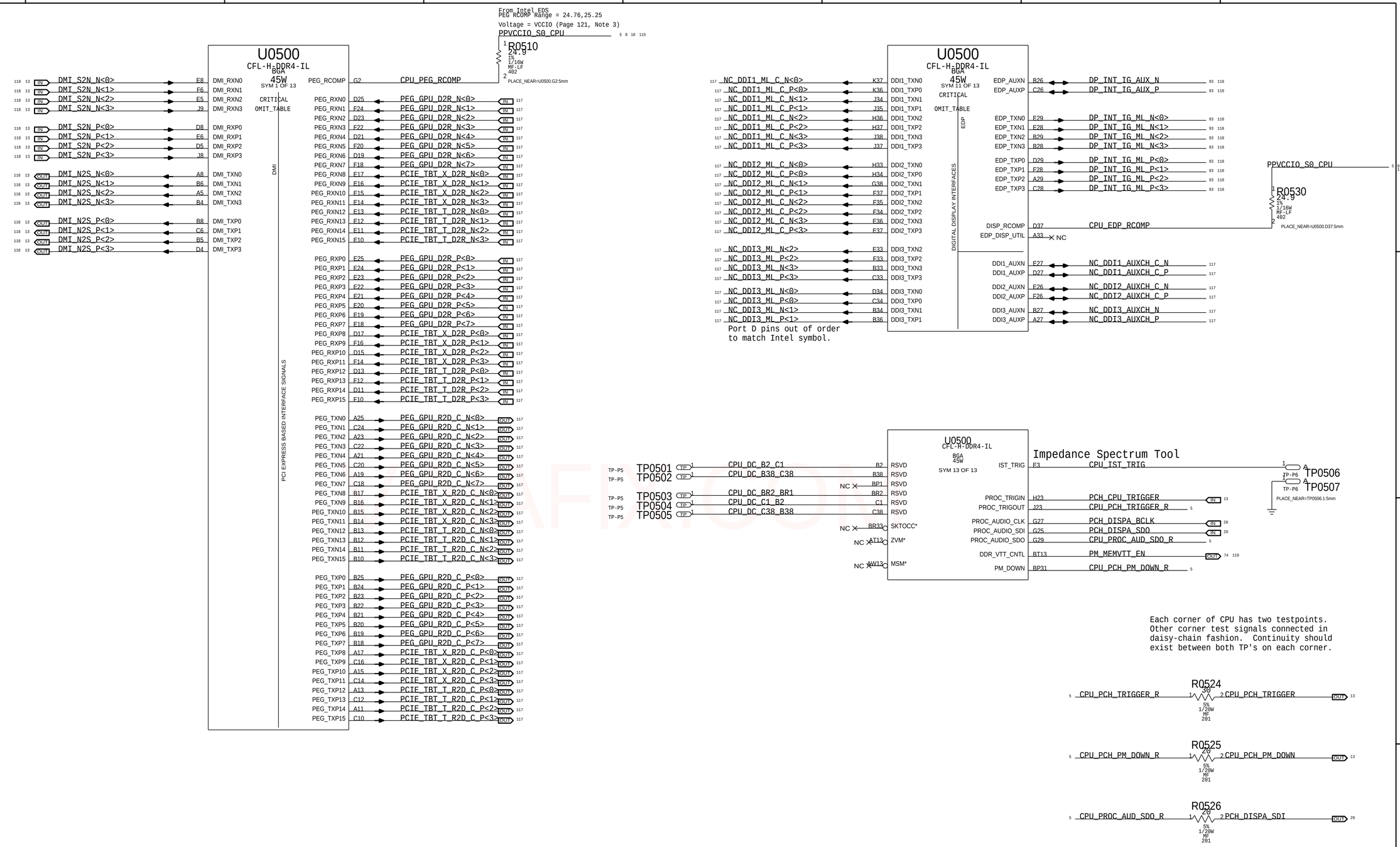

BOM_COST_GROUP=CPU & CHIPSET

PAGE TITLE

CPU DMI/PEG/FDI/RSVD

Apple Inc.

DRAWING NUMBER 051-02643 SIZE D

REVISION 4.0.0

BRANCH evt-0

PAGE 5 OF 200

SHEET 5 OF 131

NOTICE OF PROPRIETARY PROPERTY:
THE INFORMATION CONTAINED HEREIN IS THE PROPRIETARY PROPERTY OF APPLE INC.
THE POSESSOR AGREES TO THE FOLLOWING:
I TO MAINTAIN THIS DOCUMENT IN CONFIDENCE
II NOT TO REPRODUCE OR COPY IT
III NOT TO REVEAL OR PUBLISH IT IN WHOLE OR PART
IV ALL RIGHTS RESERVED

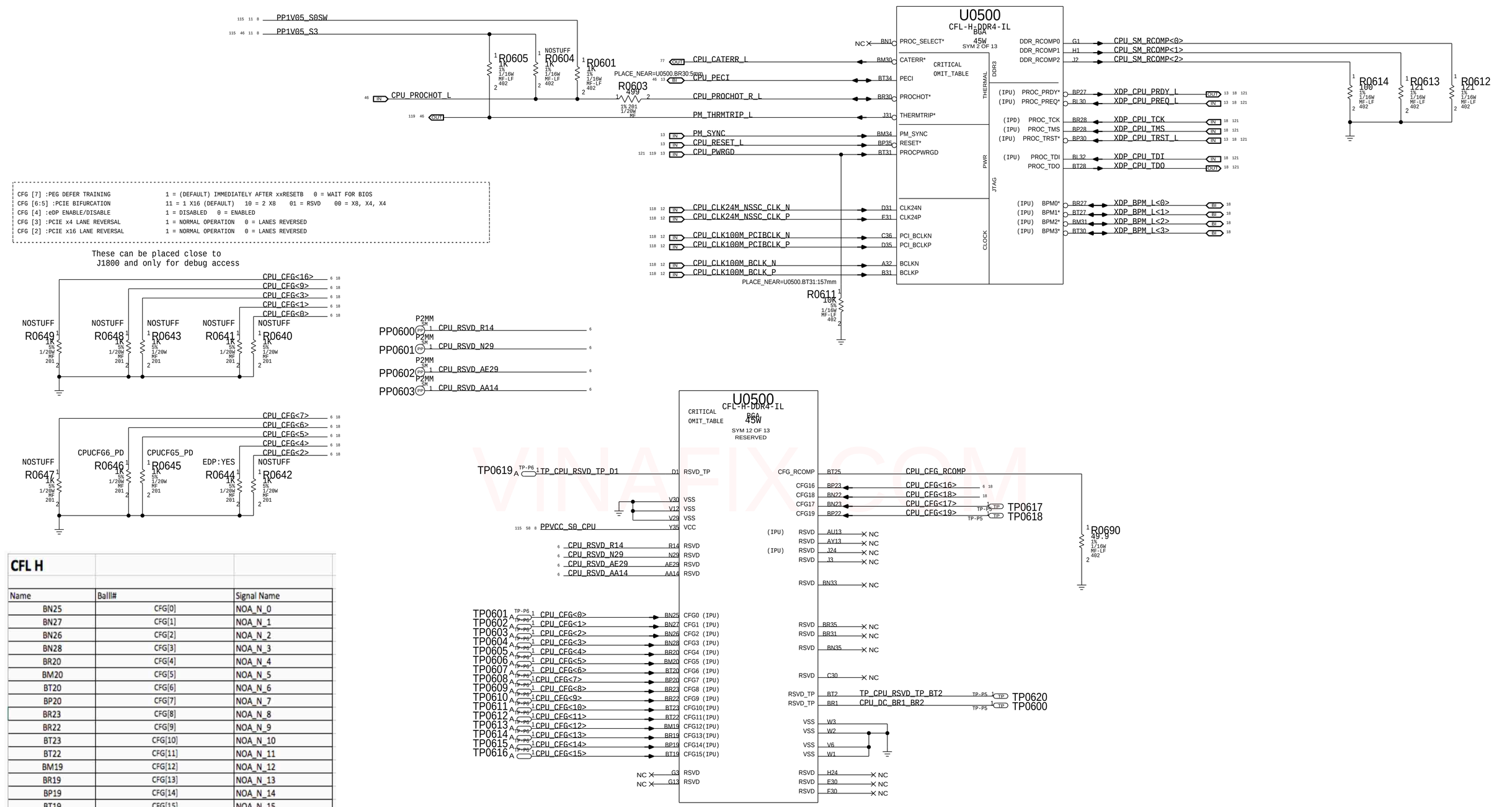

CFL H

Name	Ball#	Signal Name
BN25	CFG[0]	NOA_N_0
BN27	CFG[1]	NOA_N_1
BN26	CFG[2]	NOA_N_2
BN28	CFG[3]	NOA_N_3
BR20	CFG[4]	NOA_N_4
BM20	CFG[5]	NOA_N_5
BT20	CFG[6]	NOA_N_6
BP20	CFG[7]	NOA_N_7
BR23	CFG[8]	NOA_N_8
BR22	CFG[9]	NOA_N_9
BT23	CFG[10]	NOA_N_10
BT22	CFG[11]	NOA_N_11
BM19	CFG[12]	NOA_N_12
BR19	CFG[13]	NOA_N_13
BP19	CFG[14]	NOA_N_14
BT19	CFG[15]	NOA_N_15
BN23	CFG[17]	NOA_STB_P_0
BP22	CFG[19]	NOA_STB_P_1
D1	RSVD_TP	PEG_VIEW0
E1	RSVD_TP	PEG_VIEW1
E2	RSVD_TP	PEG_VIEW3
E3	IST_TRIG	PEG_VIEW2
BT2	RSVD_TP	DDR_VIEW1
BR1	RSVD_TP	DDR_VIEW0

BOM GROUP	BOM OPTIONS
CPUPEG:X8X8	CPUCFG5_PD
CPUPEG:X8X4X4	CPUCFG6_PD,CPUCFG5_PD

To use PEG X16 configuration, simply remove CPUPEG:X8X8 and CPUPEG:X8X4X4 from BOMs.

BOM_COST_GROUP=CPU & CHIPSET

PAGE TITLE
CPU Clock/Misc/JTAG/CFG

Apple Inc.

DRAWING NUMBER 051-02643 SIZE D
REVISION 4.0.0
BRANCH evt-0
PAGE 6 OF 200
SHEET 6 OF 131

NOTICE OF PROPRIETARY PROPERTY:
THE INFORMATION CONTAINED HEREIN IS THE PROPRIETARY PROPERTY OF APPLE INC.
THE POSESSOR AGREES TO THE FOLLOWING:
I TO MAINTAIN THIS DOCUMENT IN CONFIDENCE
II NOT TO REPRODUCE OR COPY IT
III NOT TO REVEAL OR PUBLISH IT IN WHOLE OR PART
IV ALL RIGHTS RESERVED

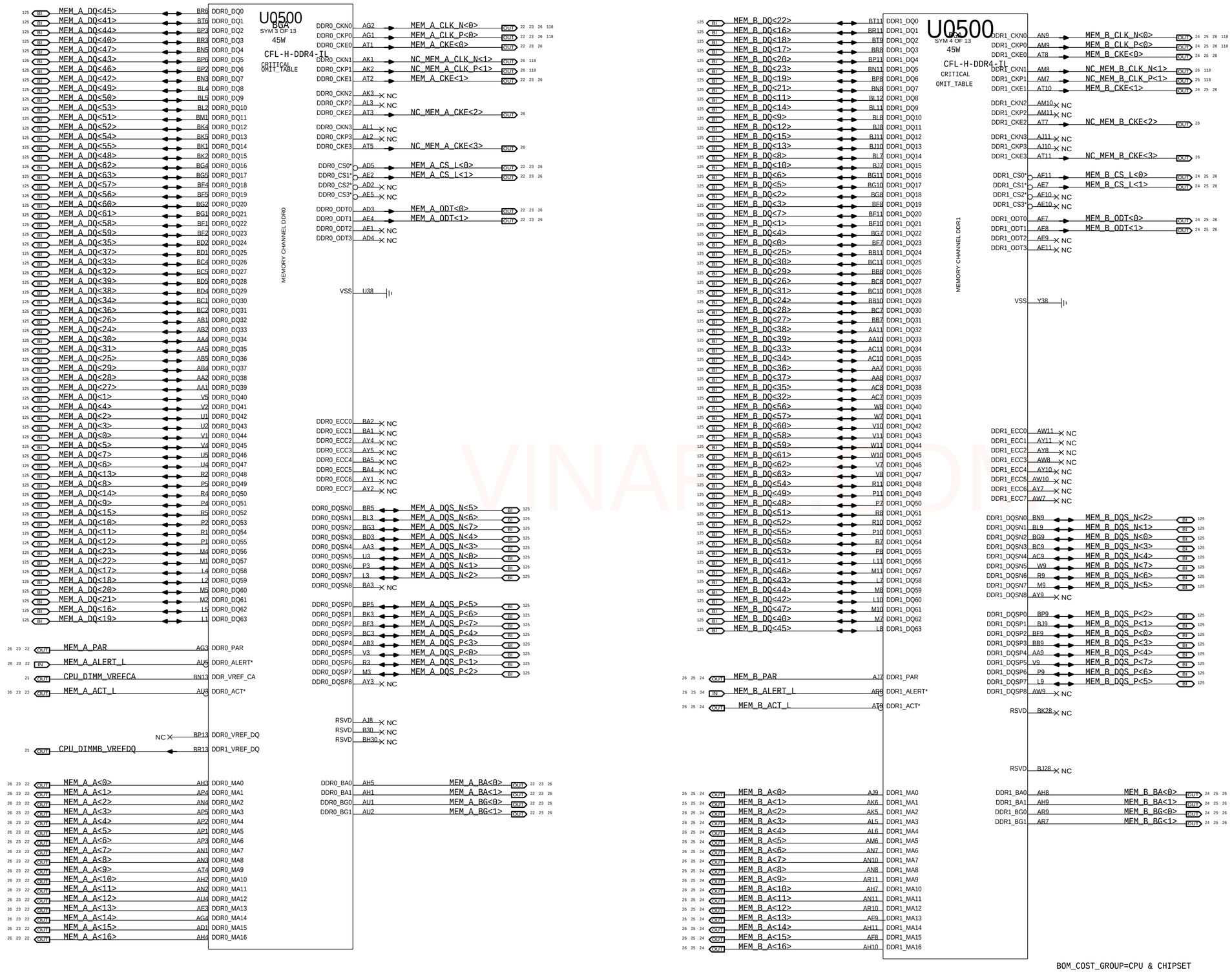

VINAFIX.COM

PAGE TITLE

CPU DDR4 Interfaces

Apple Inc.

DRAWING NUMBER	051-02643
SIZE	D
REVISION	4.0.0
BRANCH	evt-0
PAGE	7 OF 200
SHEET	7 OF 131

NOTICE OF PROPRIETARY PROPERTY:
THE INFORMATION CONTAINED HEREIN IS THE PROPRIETARY PROPERTY OF APPLE INC.
THE POSESSOR AGREES TO THE FOLLOWING:
I TO MAINTAIN THIS DOCUMENT IN CONFIDENCE
II NOT TO REPRODUCE OR COPY IT
III NOT TO REVEAL OR PUBLISH IT IN WHOLE OR PART
IV ALL RIGHTS RESERVED

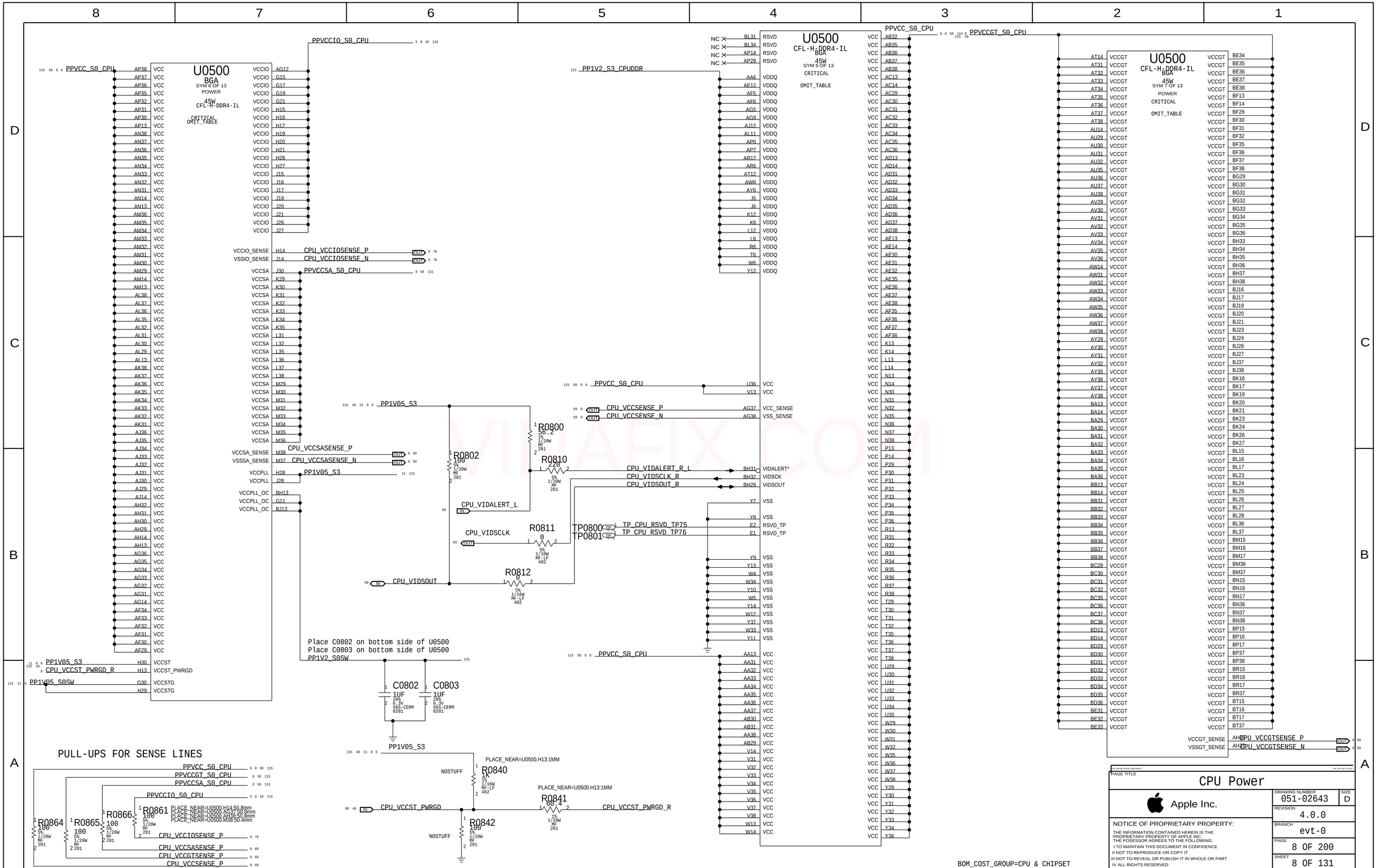
U0500
BGA
SYM 6 OF 13
POWER
45W
CFL-H-DDR4-IL
CRITICAL
OMIT_TABLE
U0500
CFL-H_DDR4-IL
BGA
45W
SYM 5 OF 13
CRITICAL
OMIT_TABLE
U0500
CFL-H_DDR4-IL
BGA
45W
SYM 7 OF 13
POWER
CRITICAL
OMIT_TABLE
PPVCC_S0_CPU
PPVCCIO_S0_CPU
PP1V2_S3_CPUDDR
PPVCCGT_S0_CPU
CPU_VCCIOSENSE_P
CPU_VCCIOSENSE_N
PPVCCSA_S0_CPU
PP1V05_S3
CPU_VCCSASENSE_P
CPU_VCCSASENSE_N
CPU_VCCSENSE_P
CPU_VCCSENSE_N
CPU_VIDALERT_R_L
CPU_VIDSCLK_R
CPU_VIDSOUT_R
CPU_VIDALERT_L
CPU_VIDSCLK
CPU_VIDSOUT
TP_CPU_RSVD_TP75
TP_CPU_RSVD_TP76
CPU_VCCGTSENSE_P
CPU_VCCGTSENSE_N
R0800 56.2
R0802 100
R0810 220
R0811 0
R0812 0
TP0800
TP0801
Place C0802 on bottom side of U0500
Place C0803 on bottom side of U0500
PP1V2_S0SW
C0802 1UF
C0803 1UF
PP1V05_S0SW
CPU_VCCST_PWRGD_R
PLACE_NEAR=U0500.H13:1MM
R0840 1K
R0841 60.4
R0842 100
NOSTUFF
CPU_VCCST_PWRGD
PULL-UPS FOR SENSE LINES
R0864 100
R0865 100
R0866 100
R0861 100
PLACE_NEAR=U0500.H14:50.8mm
PLACE_NEAR=U0500.AG37:50.8mm
PLACE_NEAR=U0500.AG36:50.8mm
PLACE_NEAR=U0500.M38:50.4mm
BOM_COST_GROUP=CPU & CHIPSET
PAGE TITLE
CPU Power
Apple Inc.
DRAWING NUMBER
051-02643
SIZE
D
REVISION
4.0.0
BRANCH
evt-0
PAGE
8 OF 200
SHEET
8 OF 131
NOTICE OF PROPRIETARY PROPERTY:
THE INFORMATION CONTAINED HEREIN IS THE PROPRIETARY PROPERTY OF APPLE INC.
THE POSESSOR AGREES TO THE FOLLOWING:
I TO MAINTAIN THIS DOCUMENT IN CONFIDENCE
II NOT TO REPRODUCE OR COPY IT
III NOT TO REVEAL OR PUBLISH IT IN WHOLE OR PART
IV ALL RIGHTS RESERVED

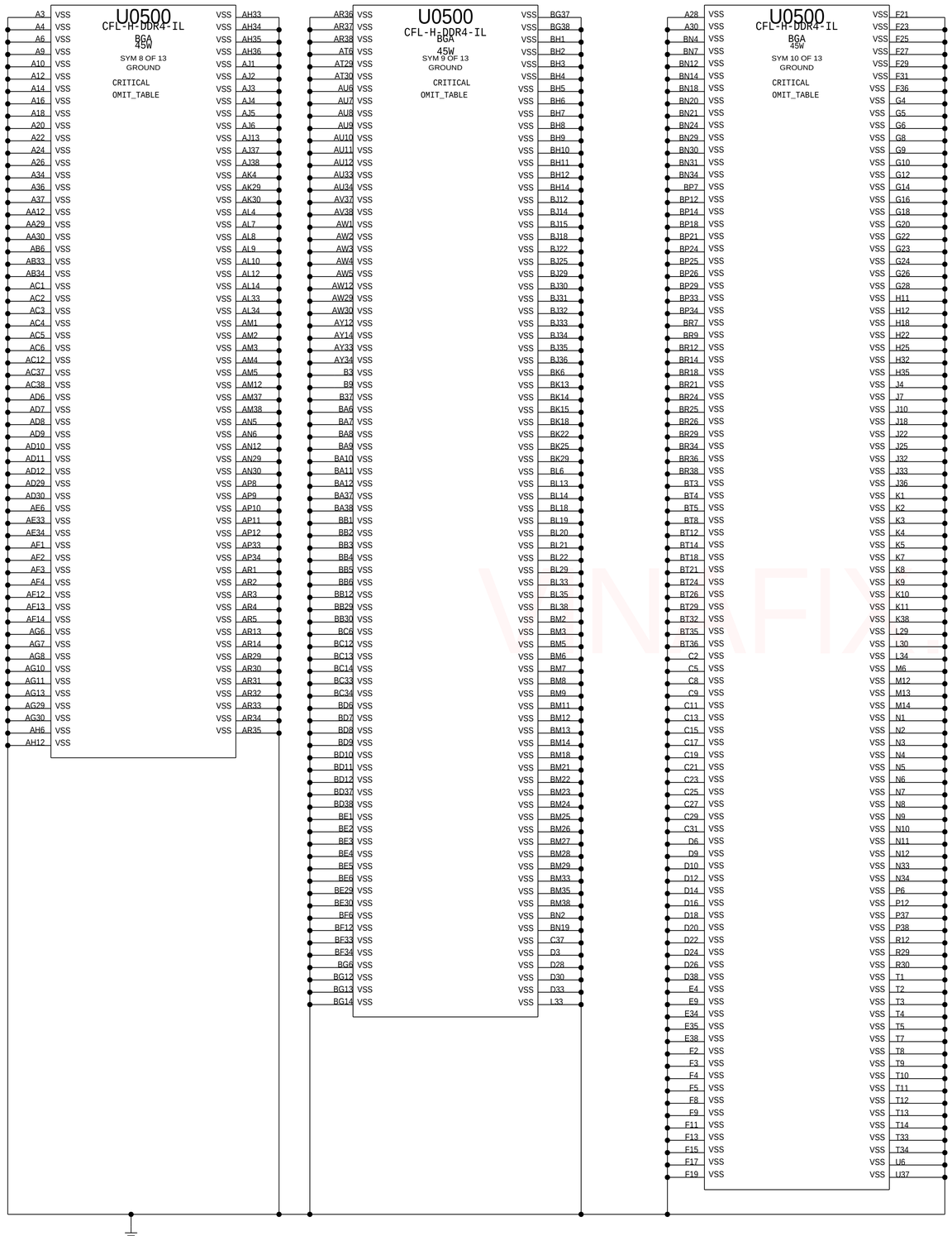

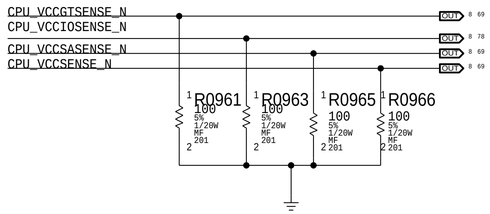

WWW.NAFIX.COM

BOM_COST_GROUP=CPU & CHIPSET

SYNC_MASTER=J300_M1B SYNC_DATE=02/08/2017

PAGE TITLE

CPU Ground

Apple Inc.

DRAWING NUMBER 051-02643 SIZE D

REVISION 4.0.0

BRANCH evt-0

PAGE 9 OF 200

SHEET 9 OF 131

NOTICE OF PROPRIETARY PROPERTY:
THE INFORMATION CONTAINED HEREIN IS THE PROPRIETARY PROPERTY OF APPLE INC.
THE POSESSOR AGREES TO THE FOLLOWING:
I TO MAINTAIN THIS DOCUMENT IN CONFIDENCE
II NOT TO REPRODUCE OR COPY IT
III NOT TO REVEAL OR PUBLISH IT IN WHOLE OR PART
IV ALL RIGHTS RESERVED

Vcc CPU Core Decoupling from 20140905 BOM

CPU VCORE Decoupling

Intel recommendation: 5x 220uF ESR 5m ohms ESL 1.9nH each,4x 47uF 0805 8x22uF 0603, 28x 10uF 0402, 3x 10uF 0402, 69x 1uF 0201 Board Edge: 2x 220uF, 4x 47uF rest on the back side
Apple Implementation:

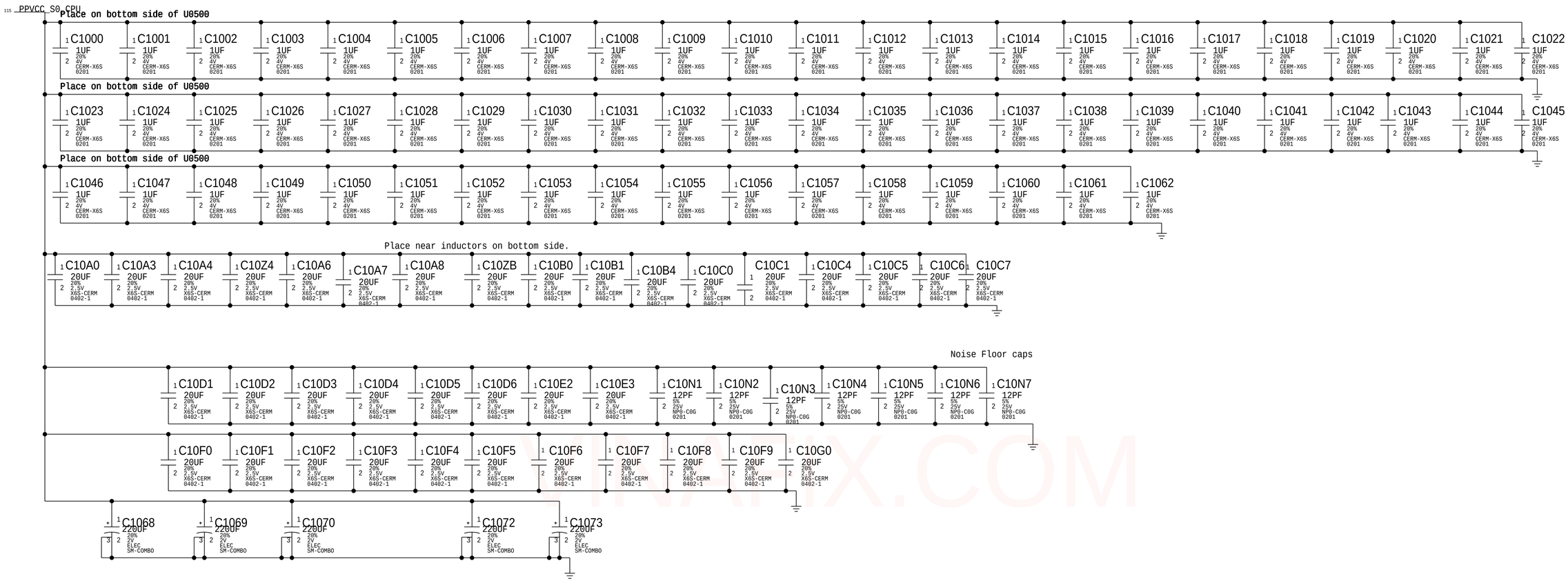

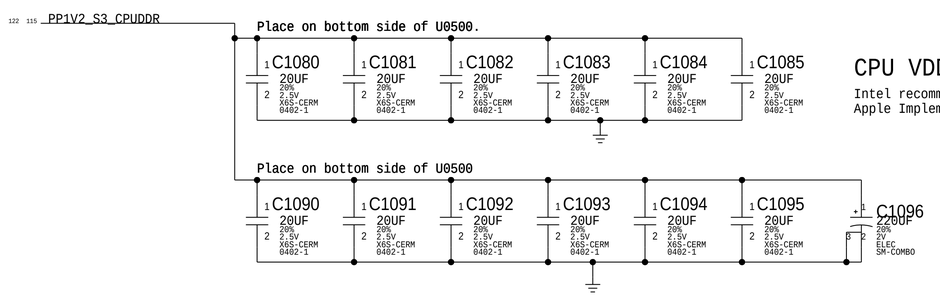

CPU VDDQ Decoupling

Intel recommendation: 10x 10uF 0402, 4x 22uF 0602
Apple Implementation:

CPU VCCIO Decoupling

Intel recommendation: 3x 10uF 0402 (opposite CPU)
Apple Implementation:

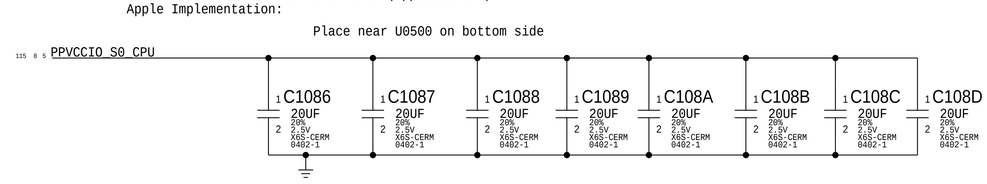

NOTE: Intel decoupling recommendations from CBR schematics for Skylake H doc#557227 and PDG section 48.1 (document# 546884)

BOM_COST_GROUP=CPU & CHIPSET

PAGE TITLE: CPU Decoupling 1

Apple Inc.

DRAWING NUMBER: 051-02643 SIZE: D
REVISION: 4.0.0
BRANCH: evt-0
PAGE: 10 OF 200
SHEET: 10 OF 131

NOTICE OF PROPRIETARY PROPERTY:
THE INFORMATION CONTAINED HEREIN IS THE PROPRIETARY PROPERTY OF APPLE INC.
THE POSESSOR AGREES TO THE FOLLOWING:
I TO MAINTAIN THIS DOCUMENT IN CONFIDENCE
II NOT TO REPRODUCE OR COPY IT
III NOT TO REVEAL OR PUBLISH IT IN WHOLE OR PART
IV ALL RIGHTS RESERVED

Vcc GT Slice Core Decoupling from 20140905 BOM

CPU VGTSlice Decoupling

Intel recommendation: 7x 220uF, 6x 47uF 0805, 6x 22uF 0603, 35x 10uF 0402, 68 1uF 0201
Apple Implementation:

Board Edge: 4x220uF, 7x 47uF rest on back side

122 116 PPVCCGT_S0_CPU

Place on bottom side of U0500

C1100 1UF 20% 4V CERM-X6S 0201
C1101 1UF 20% 4V CERM-X6S 0201
C1102 1UF 20% 4V CERM-X6S 0201
C1103 1UF 20% 4V CERM-X6S 0201
C1104 1UF 20% 4V CERM-X6S 0201
C1105 1UF 20% 4V CERM-X6S 0201
C1106 1UF 20% 4V CERM-X6S 0201
C1107 1UF 20% 4V CERM-X6S 0201
C1108 1UF 20% 4V CERM-X6S 0201
C1109 1UF 20% 4V CERM-X6S 0201
C1110 1UF 20% 4V CERM-X6S 0201
C1111 1UF 20% 4V CERM-X6S 0201
C1112 1UF 20% 4V CERM-X6S 0201
C1113 1UF 20% 4V CERM-X6S 0201
C1114 1UF 20% 4V CERM-X6S 0201
C1115 1UF 20% 4V CERM-X6S 0201
C1116 1UF 20% 4V CERM-X6S 0201
C1117 1UF 20% 4V CERM-X6S 0201
C1118 1UF 20% 4V CERM-X6S 0201
C1119 1UF 20% 4V CERM-X6S 0201
C1120 1UF 20% 4V CERM-X6S 0201
C1121 1UF 20% 4V CERM-X6S 0201
C1122 1UF 20% 4V CERM-X6S 0201
C1123 1UF 20% 4V CERM-X6S 0201

Place on bottom side of U0500

C1124 1UF 20% 4V CERM-X6S 0201
C1125 1UF 20% 4V CERM-X6S 0201
C1126 1UF 20% 4V CERM-X6S 0201
C1127 1UF 20% 4V CERM-X6S 0201
C1128 1UF 20% 4V CERM-X6S 0201
C1129 1UF 20% 4V CERM-X6S 0201
C1130 1UF 20% 4V CERM-X6S 0201
C1131 1UF 20% 4V CERM-X6S 0201
C1132 1UF 20% 4V CERM-X6S 0201
C1133 1UF 20% 4V CERM-X6S 0201
C1134 1UF 20% 4V CERM-X6S 0201
C1135 1UF 20% 4V CERM-X6S 0201
C1136 1UF 20% 4V CERM-X6S 0201
C1137 1UF 20% 4V CERM-X6S 0201
C1138 1UF 20% 4V CERM-X6S 0201
C1139 1UF 20% 4V CERM-X6S 0201
C1140 1UF 20% 4V CERM-X6S 0201
C1141 1UF 20% 4V CERM-X6S 0201
C1142 1UF 20% 4V CERM-X6S 0201
C1143 1UF 20% 4V CERM-X6S 0201
C1144 1UF 20% 4V CERM-X6S 0201
C1145 1UF 20% 4V CERM-X6S 0201
C1146 1UF 20% 4V CERM-X6S 0201
C1147 1UF 20% 4V CERM-X6S 0201

Place on bottom side of U0500

C1148 1UF 20% 4V CERM-X6S 0201
C1149 1UF 20% 4V CERM-X6S 0201
C1150 1UF 20% 4V CERM-X6S 0201
C1151 1UF 20% 4V CERM-X6S 0201
C1152 1UF 20% 4V CERM-X6S 0201
C1153 1UF 20% 4V CERM-X6S 0201
C1154 1UF 20% 4V CERM-X6S 0201
C1155 1UF 20% 4V CERM-X6S 0201
C1156 1UF 20% 4V CERM-X6S 0201
C1157 1UF 20% 4V CERM-X6S 0201
C1158 1UF 20% 4V CERM-X6S 0201
C1159 1UF 20% 4V CERM-X6S 0201
C1160 1UF 20% 4V CERM-X6S 0201
C1161 1UF 20% 4V CERM-X6S 0201
C1162 1UF 20% 4V CERM-X6S 0201
C1163 1UF 20% 4V CERM-X6S 0201
C1164 1UF 20% 4V CERM-X6S 0201
C1165 1UF 20% 4V CERM-X6S 0201
C1166 1UF 20% 4V CERM-X6S 0201
C1167 1UF 20% 4V CERM-X6S 0201

NOSTUFF
C11A0 20UF 20% 2.5V X6S-CERM 0402-1
C11A1 20UF 20% 2.5V X6S-CERM 0402-1
C11A2 20UF 20% 2.5V X6S-CERM 0402-1
C11A3 20UF 20% 2.5V X6S-CERM 0402-1
C11A4 20UF 20% 2.5V X6S-CERM 0402-1
C11A5 20UF 20% 2.5V X6S-CERM 0402-1
C11A6 20UF 20% 2.5V X6S-CERM 0402-1
C11A7 20UF 20% 2.5V X6S-CERM 0402-1
C11A8 20UF 20% 2.5V X6S-CERM 0402-1
C11A9 20UF 20% 2.5V X6S-CERM 0402-1
C11B0 20UF 20% 2.5V X6S-CERM 0402-1
C11B1 20UF 20% 2.5V X6S-CERM 0402-1
C11B2 20UF 20% 2.5V X6S-CERM 0402-1
C11B3 20UF 20% 2.5V X6S-CERM 0402-1
C11B4 20UF 20% 2.5V X6S-CERM 0402-1
C11B5 20UF 20% 2.5V X6S-CERM 0402-1
C11B6 20UF 20% 2.5V X6S-CERM 0402-1
C11B7 20UF 20% 2.5V X6S-CERM 0402-1
C11B8 20UF 20% 2.5V X6S-CERM 0402-1
C11B9 20UF 20% 2.5V X6S-CERM 0402-1
C11C0 20UF 20% 2.5V X6S-CERM 0402-1
C11C1 20UF 20% 2.5V X6S-CERM 0402-1
C11C2 20UF 20% 2.5V X6S-CERM 0402-1
C11C3 20UF 20% 2.5V X6S-CERM 0402-1
C11C4 20UF 20% 2.5V X6S-CERM 0402-1
C11C5 20UF 20% 2.5V X6S-CERM 0402-1
C11C6 20UF 20% 2.5V X6S-CERM 0402-1
C11C7 20UF 20% 2.5V X6S-CERM 0402-1
C11C8 20UF 20% 2.5V X6S-CERM 0402-1
C11C9 20UF 20% 2.5V X6S-CERM 0402-1
C11D0 20UF 20% 2.5V X6S-CERM 0402-1

NOSTUFF
C11F0 20UF 20% 2.5V X6S-CERM 0402-1
C11F1 20UF 20% 2.5V X6S-CERM 0402-1
C11F2 20UF 20% 2.5V X6S-CERM 0402-1
C11F3 20UF 20% 2.5V X6S-CERM 0402-1
C11F4 20UF 20% 2.5V X6S-CERM 0402-1
C11F5 20UF 20% 2.5V X6S-CERM 0402-1
C11F6 20UF 20% 2.5V X6S-CERM 0402-1
C11F7 20UF 20% 2.5V X6S-CERM 0402-1
C11E0 20UF 20% 2.5V X6S-CERM 0402-1
C11E1 20UF 20% 2.5V X6S-CERM 0402-1
C11E2 20UF 20% 2.5V X6S-CERM 0402-1
C11E3 20UF 20% 2.5V X6S-CERM 0402-1
C11E4 20UF 20% 2.5V X6S-CERM 0402-1
C11E5 20UF 20% 2.5V X6S-CERM 0402-1

NOSTUFF
C11D4 20UF 20% 2.5V X6S-CERM 0402-1
C11D3 20UF 20% 2.5V X6S-CERM 0402-1
C11D2 20UF 20% 2.5V X6S-CERM 0402-1
C11D1 20UF 20% 2.5V X6S-CERM 0402-1

C1168 220UF 20% 2V ELEC SM-COMBO
C1170 220UF 20% 2V ELEC SM-COMBO
C1171 220UF 20% 2V ELEC SM-COMBO
C1172 220UF 20% 2V ELEC SM-COMBO

VINAFIX.COM

CPU VCCSTG Decoupling

115 8 6 PP1V05_S0SW

Place near U0500 on bottom side

C11L1 1UF 20% 4V CERM-X6S 0201
C11L2 1UF 20% 4V CERM-X6S 0201

CPU VCCPLL and VCCST Decoupling

115 8 PP1V05_S3

46 8 6 115 PP1V05_S3

C11M1 1UF 20% 4V CERM-X6S 0201
C11M2 1UF 20% 4V CERM-X6S 0201

Place near U0500 on bottom side

115 PPVCCSA_S0_CPU

Place on bottom side of U0500

C11H0 1UF 20% 4V CERM-X6S 0201
C11H1 1UF 20% 4V CERM-X6S 0201
C11H2 1UF 20% 4V CERM-X6S 0201

NOSTUFF
C11I0 20UF 20% 2.5V X6S-CERM 0402-1
C11I1 20UF 20% 2.5V X6S-CERM 0402-1
C11I2 20UF 20% 2.5V X6S-CERM 0402-1
C11I3 20UF 20% 2.5V X6S-CERM 0402-1
C11I4 20UF 20% 2.5V X6S-CERM 0402-1
C11I5 20UF 20% 2.5V X6S-CERM 0402-1
C11I6 20UF 20% 2.5V X6S-CERM 0402-1
C11I7 20UF 20% 2.5V X6S-CERM 0402-1

C11K9 220UF 20% 2V ELEC SM-COMBO

CPU VCCSA Decoupling

Intel recommendation: 2x 220uF, 1x 47uF 0805. 1x 22uF. 7x 10uF 0402, 3x 1uF 0201_
2x 220uF, 1x 22uF on board edge, everything else on back side
Apple Implementation:

NOTE: Intel decoupling recommendations from CBR schematics for Skylake H doc#557227 and PDG section 48.1 (document# 546884)

BOM_COST_GROUP=CPU & CHIPSET

PAGE TITLE
CPU Decoupling 2

Apple Inc.

DRAWING NUMBER 051-02643
SIZE D
REVISION 4.0.0
BRANCH evt-0
PAGE 11 OF 200
SHEET 11 OF 131

NOTICE OF PROPRIETARY PROPERTY:
THE INFORMATION CONTAINED HEREIN IS THE PROPRIETARY PROPERTY OF APPLE INC.
THE POSESSOR AGREES TO THE FOLLOWING:
I TO MAINTAIN THIS DOCUMENT IN CONFIDENCE
II NOT TO REPRODUCE OR COPY IT
III NOT TO REVEAL OR PUBLISH IT IN WHOLE OR PART
IV ALL RIGHTS RESERVED

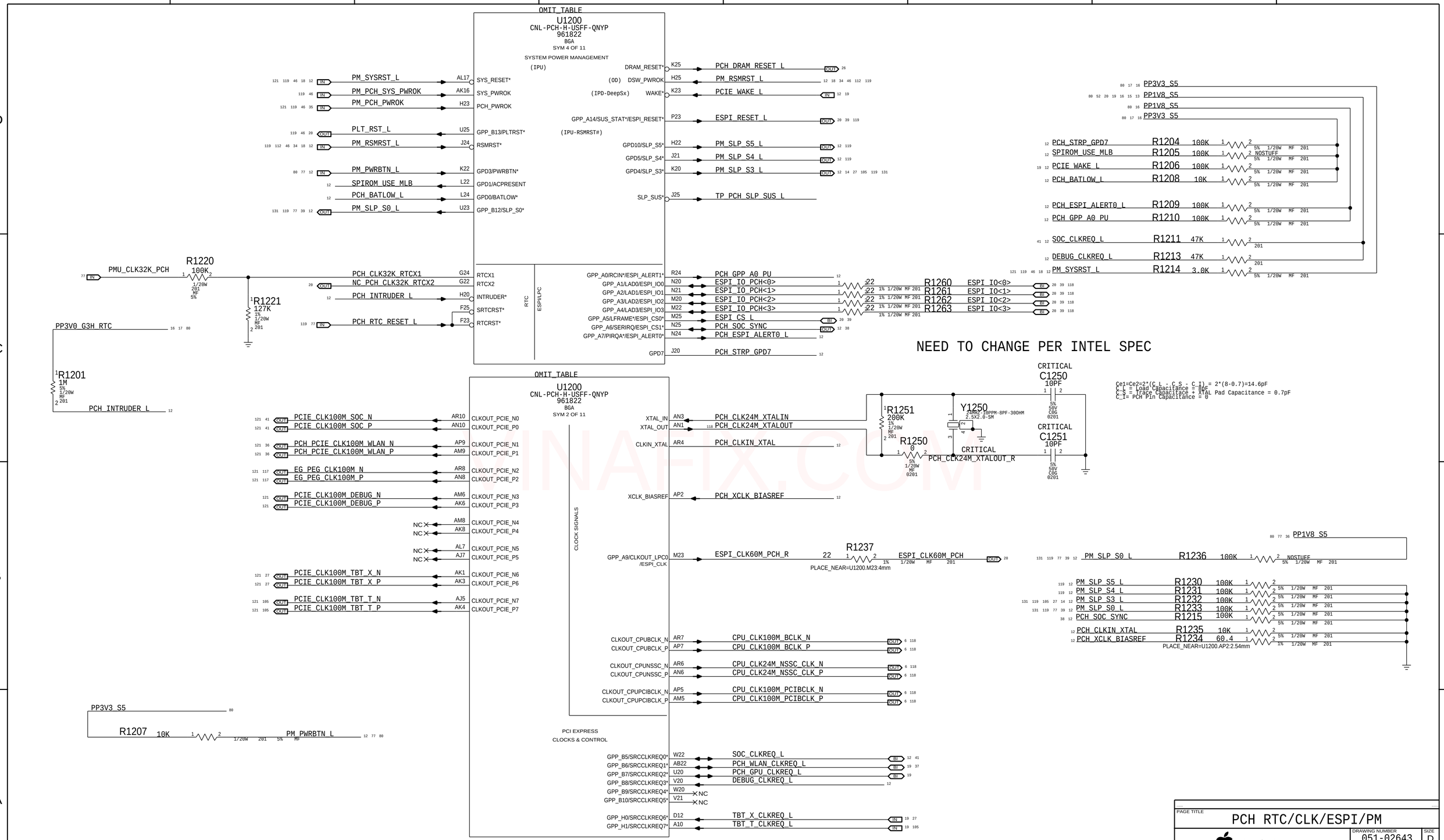

BOM_COST_GROUP=CPU & CHIPSET

PAGE TITLE
PCH RTC/CLK/ESPI/PM

Apple Inc.

DRAWING NUMBER 051-02643 SIZE D
REVISION 4.0.0
BRANCH evt-0
PAGE 12 OF 200
SHEET 12 OF 131

NOTICE OF PROPRIETARY PROPERTY:
THE INFORMATION CONTAINED HEREIN IS THE PROPRIETARY PROPERTY OF APPLE INC.
THE POSESSOR AGREES TO THE FOLLOWING:
I TO MAINTAIN THIS DOCUMENT IN CONFIDENCE
II NOT TO REPRODUCE OR COPY IT
III NOT TO REVEAL OR PUBLISH IT IN WHOLE OR PART
IV ALL RIGHTS RESERVED

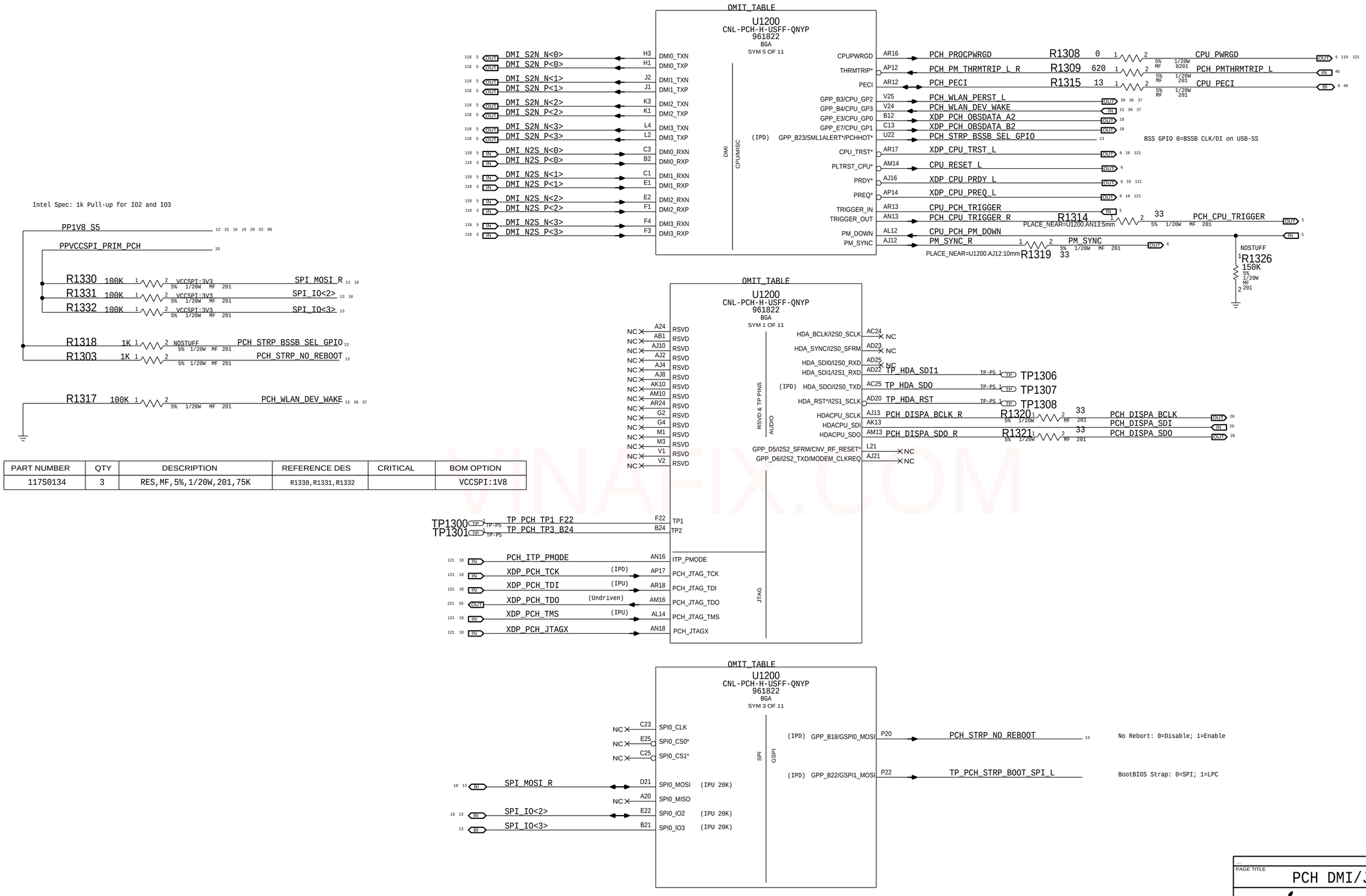

PART NUMBER	QTY	DESCRIPTION	REFERENCE DES	CRITICAL	BOM OPTION
117S0134	3	RES,MF,5%,1/20W,201,75K	R1330,R1331,R1332		VCCSPI:1V8

BOM_COST_GROUP=CPU & CHIPSET

VINA-IX.COM

PAGE TITLE
PCH DMI/JTAG/SPI/HDA

Apple Inc.

DRAWING NUMBER 051-02643 SIZE D
REVISION 4.0.0
BRANCH evt-0
PAGE 13 OF 200
SHEET 13 OF 131

NOTICE OF PROPRIETARY PROPERTY:
THE INFORMATION CONTAINED HEREIN IS THE PROPRIETARY PROPERTY OF APPLE INC.
THE POSESSOR AGREES TO THE FOLLOWING:
I TO MAINTAIN THIS DOCUMENT IN CONFIDENCE
II NOT TO REPRODUCE OR COPY IT
III NOT TO REVEAL OR PUBLISH IT IN WHOLE OR PART
IV ALL RIGHTS RESERVED

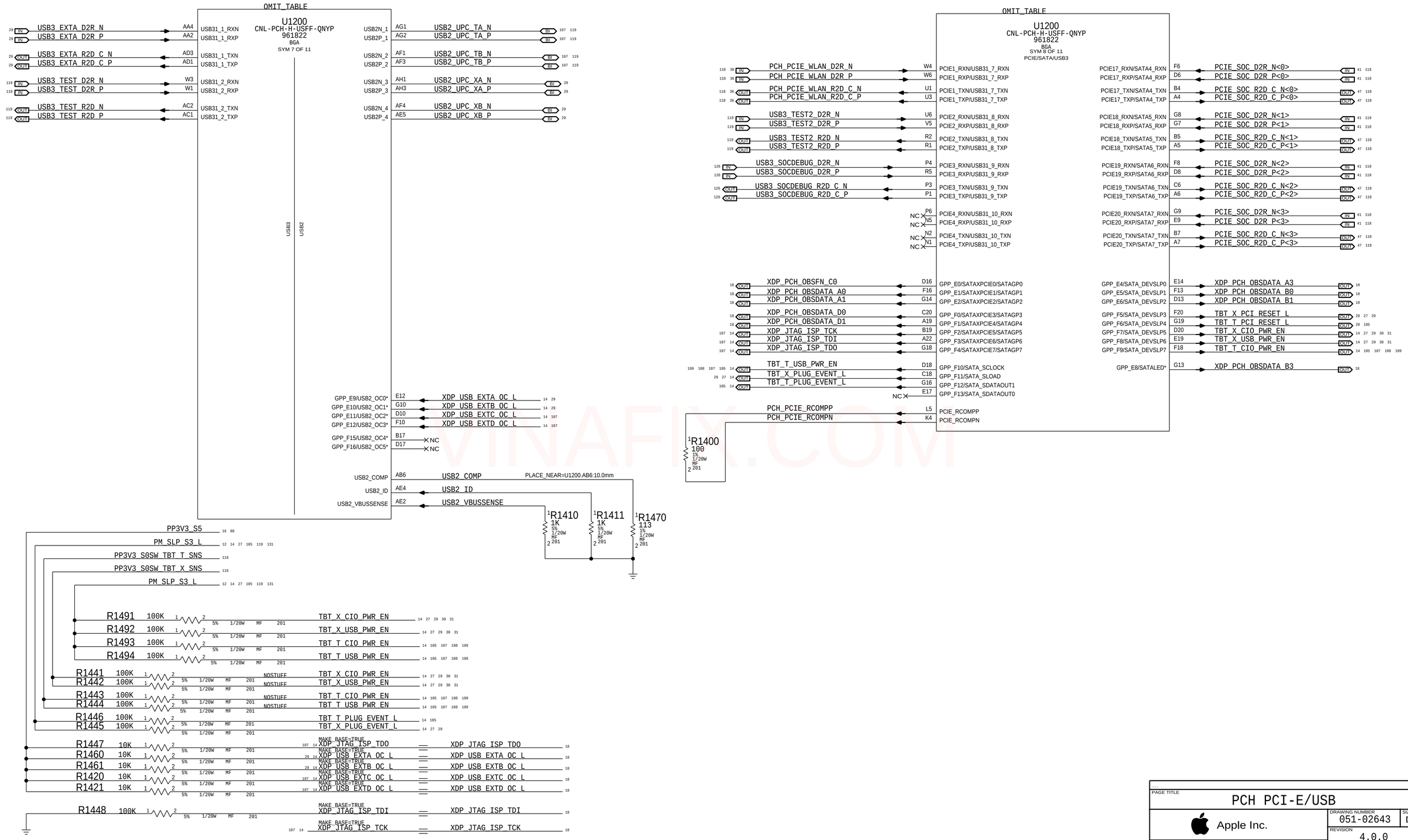

PAGE TITLE
PCH PCI-E/USB

Apple Inc.

DRAWING NUMBER 051-02643 SIZE D
REVISION 4.0.0
BRANCH evt-0
PAGE 14 OF 200
SHEET 14 OF 131

NOTICE OF PROPRIETARY PROPERTY:
THE INFORMATION CONTAINED HEREIN IS THE PROPRIETARY PROPERTY OF APPLE INC.
THE POSESSOR AGREES TO THE FOLLOWING:
I TO MAINTAIN THIS DOCUMENT IN CONFIDENCE
II NOT TO REPRODUCE OR COPY IT
III NOT TO REVEAL OR PUBLISH IT IN WHOLE OR PART
IV ALL RIGHTS RESERVED

SPEED	CONFIG3
2400MHZ	0
2133MHZ	1

STORAGE	CONFIG2
16GB	1
32GB	0

VENDOR	CONFIG1	CONFIG0
SAMSUNG	1	0
MICRON	0	1
HYNIX	0	0

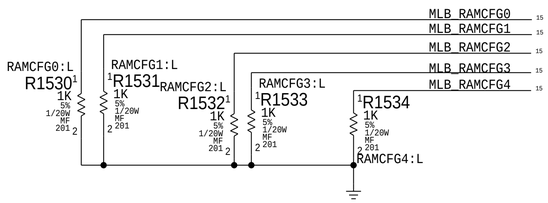

OMIT_TABLE

U1200
CNL-PCH-H-USFF-QNYP
961822
BGA
SYM 9 OF 11

Signal	Pin	Function
EDP_IG PANEL PWR (OUT 93 15)	A18	GPP_F14/PS_ON*
EDP_IG BKLT EN (OUT 93 15)	A16	GPP_F19/EDP_VDDEN
	C16	GPP_F20/EDP_BKLTEN
	A14	GPP_F21/EDP_BKLTCTL
	B14	GPP_F22/DDPF_CTRLCLK
	A13	GPP_F23/DDPF_CTRLDATA
	AN23	GPP_I0/DDPB_HPD0/DISP_MISC0
	AN25	GPP_I1/DDPC_HPD1/DISP_MISC1
	AP24	GPP_I2/DDPD_HPD2_DISP_MISC2
	AP22	GPP_I3/DDPF_HPD3_DISP_MISC3
DP_INT_IG_HPD (IN 93 15)	AR22	GPP_I4/EDP_HPD/DISP_MISC4
	AP19	GPP_I5/DDPB_CTRLCLK
	AM19	GPP_I6/DDPB_CTRLDATA
	AR20	GPP_I7/DDPC_CTRLCLK
	AN20	GPP_I8/DDPC_CTRLDATA
	AP21	GPP_I9/DDPD_CTRLCLK
	AR21	GPP_I10/DDPD_CTRLDATA
	AL24	GPP_I11/M2_SKT2_CFG0
	AL25	GPP_I12/M2_SKT2_CFG1
TBT_POC_RESET (OUT 107 29 15)	AK25	GPP_I13/M2_SKT2_CFG2
PCH_STRP_SPIROM_SAF (15)	A9	GPP_H12/SML2ALERT* (IPD)
PCH_STRP_GPP_H15 (15)	B9	GPP_H15/SML3ALERT*
WLAN_AUDIO_SYNC_LS3V3 (IN 19 15)	C10	GPP_H23/TIME_SYNC0

GPPF/BACKLIGHT; GPPI/DISPLAY; GPPH/I2C/INTEGRATED SENSOR/SMLINK; GPPG

Signal	Pin	Function
	AM18	GPP_J0/CNV_PA_BLANKING — SOC_SWD_MUX_SEL_PCH (15)
	AK18	GPP_J1/CPU_C10_GATE* — CPU_C10_GATE_L (OUT 15 76 78 79 131)
	AL19	GPP_J2 — PCH_SWD_SOC_CLK (15) — GPP_J2:Unused
	AJ18	GPP_J3 — PCH_SWD_SOC_IO (15) — GPP_J3:Unused
(IPD)	AJ22	GPP_J4/CNV_BRI_DT/UART0B_RTS* — PCH_STRP_XTAL_24MHZ (15) — GPP_J4: 0=38.4MHz 1=24MHz XTAL
	AH23	GPP_J5/CNV_BRI_RSP/UART0B_RXD — MLB_RAMCFG2 (15)
	AJ25	GPP_J6/CNV_RGI_DT/UART0B_TXD — PCH_STRP_CNV_L (15) — GPP_J6: 0=ENABLE 1=DISABLE
	AH25	GPP_J7/CNV_RGI_RSP/UART0B_CTS* — MLB_RAMCFG3 (15)
	AK22	GPP_J8/CNV_MFUART2_RXD — MLB_RAMCFG4 (15)
(IPD)	AK23	GPP_J9/CNV_MFUART2_TXD — PCH_STRP_VCCPSPI_1V8 (15) — GPP_J9: 0=3.3V; 1=1.8V
	AM20	GPP_J10 — PCH_BT_ROM_BOOT_L (15 36)
	AK20	GPP_J11/A4WP_PRESENT — PCH_BT_DEV_WAKE (15 36)
GPP_K20	A8	MLB_RAMCFG0 (15)
GPP_K21	C8	MLB_RAMCFG1 (15)
GPPJ_RCOMP_1P8	AJ17	PCH_GPPJ_RCOMP_1P8 (15)
CNV_WR_CLKP	AG24	NC
CNV_WR_CLKN	AG25	NC
CNV_WR_D0P	AF23	NC
CNV_WR_D0N	AF25	NC
CNV_WR_D1P	AE22	NC
CNV_WR_D1N	AE24	NC
CNV_WT_CLKP	AH22	NC
CNV_WT_CLKN	AH20	NC
CNV_WT_D0P	AG21	NC
CNV_WT_D0N	AG20	NC
CNV_WT_D1P	AF22	NC
CNV_WT_D1N	AF20	NC
CNV_WT_RCOMP	AE21	NC

J680 Display Port DDPF Disabled

PDG recommends to NC the HPD lines not being used

J680 Display Port DDPB/C/D Disabled

eSPI Flash Mode: 0=MAF; 1=SAF

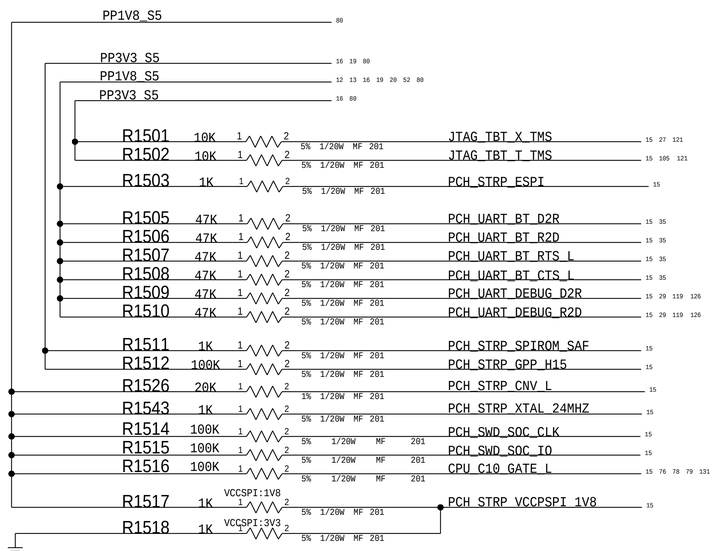

OMIT_TABLE

U1200
CNL-PCH-H-USFF-QNYP
961822
BGA
SYM 6 OF 11

Signal	Pin	Function
SOC_PERST_L (OUT 39 20)	R22	GPP_A20/ISH_GP2
PCH_GCON_INT_L (IN 39)	P25	GPP_A21/ISH_GP3
TP1501 (TP-P5) TP_PCH_STRP_TOPBLK_SWP_L (PLACE_SIDE=BOTTOM)	R21	GPP_B14/SPKR (IPD)
JTAG_TBT_X_TMS (OUT 121 27 15)	AC20	GPP_D0/SPI1_CS*/SBK0/BK0
JTAG_TBT_T_TMS (OUT 121 105 15)	AC21	GPP_D1/SPI1_CLK/SBK1/BK1
NC	AB20	GPP_D12/ISH_SPI_MOSI/GP_BSSB_DI/GSPI2_MOSI
GPP_C0/SMBCLK	W23	SMBUS_PCH_CLK (OUT 52) — PROJ-SPECIFIC PULLUP
GPP_C1/SMBDATA	W25	SMBUS_PCH_DATA (IN 52)
(IPD) GPP_C2/SMBALERT*	AA22	TP_PCH_STRP_TLSCONF — TLS: 0=Disbale; 1=Enable
(IPD) GPP_C5/SML0ALERT*	AB19	PCH_STRP_ESPI (15) — GPP_C5: 0=LPC; 1=eSPI
GPP_C8/UART0A_RXD	AA24	PCH_UART_BT_D2R (IN 15 35)
GPP_C9/UART0A_TXD	AA21	PCH_UART_BT_R2D (OUT 15 35)
GPP_C10/UART0A_RTS*	AA18	PCH_UART_BT_RTS_L (OUT 15 35)
GPP_C11/UART0A_CTS*	Y19	PCH_UART_BT_CTS_L (IN 15 35)
GPP_C20/UART2_RXD	AB25	PCH_UART_DEBUG_D2R (IN 15 29 119 126)
GPP_C21/UART2_TXD	AB23	PCH_UART_DEBUG_R2D (OUT 15 29 119 126)

GPPA/INTEGRATED SENSOR; GPPB; GPPD/INTEGRATED SENSOR/UART/I2C; GPPC/SMLINK/I2C/UART

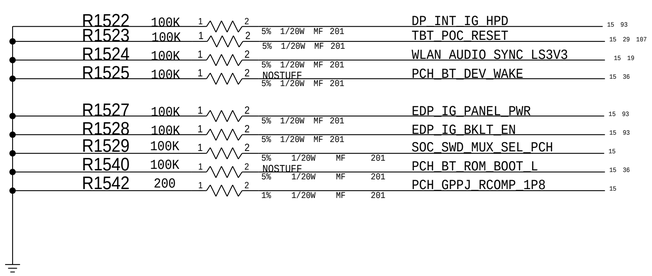

BOM_COST_GROUP=CPU & CHIPSET

VINAFIX.COM

PAGE TITLE: PCH GPIO/MISC/NCTF

Apple Inc.

DRAWING NUMBER: 051-02643 SIZE: D
REVISION: 4.0.0
BRANCH: evt-0
PAGE: 15 OF 200
SHEET: 15 OF 131

NOTICE OF PROPRIETARY PROPERTY:
THE INFORMATION CONTAINED HEREIN IS THE PROPRIETARY PROPERTY OF APPLE INC.
THE POSESSOR AGREES TO THE FOLLOWING:
I TO MAINTAIN THIS DOCUMENT IN CONFIDENCE
II NOT TO REPRODUCE OR COPY IT
III NOT TO REVEAL OR PUBLISH IT IN WHOLE OR PART
IV ALL RIGHTS RESERVED

OMIT_TABLE

U1200
CNL-PCH-H-USFF-QNYP
961822
BGA
SYM 10 OF 11
POWER

Signal	Pin	Net	Notes
PP1V05_PRIM (115 80 17)	AB12	VCCPRIM_1P05	PRIMARY WELL
	AB14	VCCPRIM_1P05	
	AB17	VCCPRIM_1P05	
	AB7	VCCPRIM_1P05	
	AB9	VCCPRIM_1P05	
	AD12	VCCPRIM_1P05	
	AD14	VCCPRIM_1P05	
	AD9	VCCPRIM_1P05	
	AE11	VCCPRIM_1P05	
	AF7	VCCPRIM_1P05	
	H7	VCCPRIM_1P05	
	H9	VCCPRIM_1P05	
	J15	VCCPRIM_1P05	
	K14	VCCPRIM_1P05	
	K17	VCCPRIM_1P05	
	K7	VCCPRIM_1P05	
	K9	VCCPRIM_1P05	
	M7	VCCPRIM_1P05	
	M9	VCCPRIM_1P05	
	P12	VCCPRIM_1P05	
	P14	VCCPRIM_1P05	
	P17	VCCPRIM_1P05	
	P7	VCCPRIM_1P05	
	P9	VCCPRIM_1P05	
	T12	VCCPRIM_1P05	
	T14	VCCPRIM_1P05	
	T17	VCCPRIM_1P05	
	T7	VCCPRIM_1P05	
	T9	VCCPRIM_1P05	
	V12	VCCPRIM_1P05	
	V14	VCCPRIM_1P05	
	V17	VCCPRIM_1P05	
	V9	VCCPRIM_1P05	
	Y12	VCCPRIM_1P05	
	Y14	VCCPRIM_1P05	
	Y17	VCCPRIM_1P05	
	Y7	VCCPRIM_1P05	
	Y9	VCCPRIM_1P05	
PP3V3_S5 (80 17 12)	AD17	VCCPRIM_3P3	PRIMARY WELL HVCMOS
	AE15	VCCPRIM_3P3	
	AE18	VCCPRIM_3P3	
	M17	VCCPRIM_3P3	
	V7	VCCPRIM_3P3	
PP1V05_PRIM_PCH_VCCAPLL_F (17)	AF6	VCCAPLL_1P05	
	AG8	VCCAPLL_1P05	
PP1V05_PRIM (115)	AC5	VCCDUSB_1P05	
PP1V05_PRIM (115)	AJ6	VCCA_BCLK_1P05	
PP1V05_PRIM (115)	AG5	VCCA_SRC_1P05	
PP1V05_PRIM_PCH_VCCAXTAL_F (17)	AD7	VCCA_XTAL_1P05	
PP1V8_S5 (80 17) Share with GPIO J Group Power	AG11	VCCPRIM_1P8	
	AG13	VCCPRIM_1P8	
	AH12	VCCPRIM_1P8	
	AH14	VCCPRIM_1P8	
PP1V05_PRIM (115 17)	K6	VCCPRIM_MPHY_1P05	
PP1V8_S0_PCH_VCCHDA_F (17)	AD19	VCCHDA	HD AUDIO POWER

Signal	Pin	Net	Notes
AUDIO PLL			
MOD PHY PRIMARY	AF19	VCCDPHY_1P24	PP1V24_S5_PCH_VCCDPHY (17)
	AG18	VCCDPHY_1P24	
	AH17	VCCDPHY_1P24	
	AH19	VCCDPHY_1P24	
	M19	VCCDSW_3P3	PP3V3_S5 (12 17 80)
	N18	VCCDSW_1P05	PP1V05_S5_PCH_VCCDSW (17) Internal Supply
DEEP SX WELL			
	M6	VCCAMPHYPLL_1P05	PP1V_PRIM_PCH_VCCAMPHYPLL_F (17)
LDO	AF12	VCCPHVLDO_1P8	
	AF14	VCCPHVLDO_1P8	PP1V8_PCH_VCCPHYLDO (17) Internal LDO, leave this pin as NC
GPPA PRIMARY WELL	P19	VCCPGPPA	PP1V8_S5 (12 80)
GPPB/GPPC PRIMARY WELL	T19	VCCPGPPBC	PP1V8_S5 (12 13 15 19 20 52 80)
GPPD PRIMARY WELL	V19	VCCPGPPD	PP3V3_S5 (15 80)
GPPE/GPPEF PRIMARY WELL	M12	VCCPGPPEF	PP3V3_S5 (14 80)
	M14	VCCPGPPEF	
GPPH/GPPK PRIMARY WELL	K12	VCCPGPPHK	PP3V3_S5 (15 19 80)
	H17	DCPRTC	PPDCPRTC_PCH (17)
RTC WELL SUPPLY	G20	VCCRTC	PP3V0_G3H_RTC (12 17 80)
	H19	VCCRTC	
RTC LOGIC PW/VRM			
SPI	K19	VCCSPI	PPVCCSPI_PRIM_PCH
ANALOG PLL USB2/VRM			

R1601 (VOLTAGE=3.3V): 0201 MF 0 1/20W 5% — PP3V3_S5 (80) — VCCSPI:3V3

R1602: 0201 MF 0 1/20W 5% — PP1V8_S5 (80) — VCCSPI:1V8

OMIT_TABLE

U1200
CNL-PCH-H-USFF-QNYP
961822
BGA
SYM 11 OF 11

Pin	Net
R6	VSS
U13	VSS
A12	VSS
A1	VSS
A2	VSS
AJ24	VSS
AP4	VSS
D5	VSS
G17	VSS
J11	VSS
L20	VSS
AL1	VSS
AA20	VSS
AC22	VSS
AG4	VSS
AH9	VSS
AJ1	VSS
AJ9	VSS
AJ14	VSS
AJ19	VSS
AJ20	VSS
AL2	VSS
AR14	VSS
AR19	VSS
AL4	VSS
AL9	VSS
AL22	VSS
AM7	VSS
AM12	VSS
AM17	VSS
AM21	VSS
AP1	VSS
AP25	VSS
AR1	VSS
AR2	VSS
AR5	VSS
AR9	VSS
E24	VSS
G1	VSS
AR25	VSS
B1	VSS
B25	VSS
D7	VSS
D9	VSS
D14	VSS
D19	VSS
E4	VSS
E7	VSS
J5	VSS
J8	VSS
G5	VSS
G12	VSS
G21	VSS
G25	VSS
H4	VSS
H6	VSS
H12	VSS
H14	VSS
J4	VSS
J6	VSS
J13	VSS
J22	VSS
J18	VSS
N15	VSS
R4	VSS
R8	VSS
L1	VSS
L6	VSS
L8	VSS
L11	VSS
L13	VSS
L15	VSS
L18	VSS
L25	VSS
M4	VSS
N4	VSS
N6	VSS
N8	VSS
N11	VSS
N13	VSS
N22	VSS
U4	VSS
U8	VSS
R11	VSS
R13	VSS
R15	VSS
R18	VSS
R20	VSS
R25	VSS
U15	VSS
U11	VSS
W13	VSS
W18	VSS
U18	VSS
V4	VSS
V6	VSS
V22	VSS
W8	VSS
W11	VSS
W15	VSS
A25	VSS
AA1	VSS
AA5	VSS
A17	VSS
A21	VSS
AA25	VSS
AB3	VSS
AA6	VSS
AA8	VSS
AA11	VSS
AA13	VSS
AA15	VSS
AC4	VSS
AC6	VSS
AB4	VSS
AC8	VSS
AE1	VSS
AE6	VSS
AE8	VSS
AE13	VSS
AC11	VSS
AC13	VSS
AC15	VSS
AC18	VSS
AD4	VSS
AD6	VSS
AE20	VSS
AE25	VSS
AF9	VSS
AF17	VSS
AG6	VSS
AG15	VSS
AG22	VSS
AH4	VSS
AH6	VSS
AH7	VSS
B22	VSS

Current data from LPT EDS (doc #486708, Rev 1.0).

BOM_COST_GROUP=CPU & CHIPSET

VINAFIX.COM

PAGE TITLE: PCH Power

Apple Inc.

DRAWING NUMBER: 051-02643 SIZE: D

REVISION: 4.0.0

BRANCH: evt-0

PAGE: 16 OF 200

SHEET: 16 OF 131

NOTICE OF PROPRIETARY PROPERTY:
THE INFORMATION CONTAINED HEREIN IS THE PROPRIETARY PROPERTY OF APPLE INC.
THE POSESSOR AGREES TO THE FOLLOWING:
I TO MAINTAIN THIS DOCUMENT IN CONFIDENCE
II NOT TO REPRODUCE OR COPY IT
III NOT TO REVEAL OR PUBLISH IT IN WHOLE OR PART
IV ALL RIGHTS RESERVED

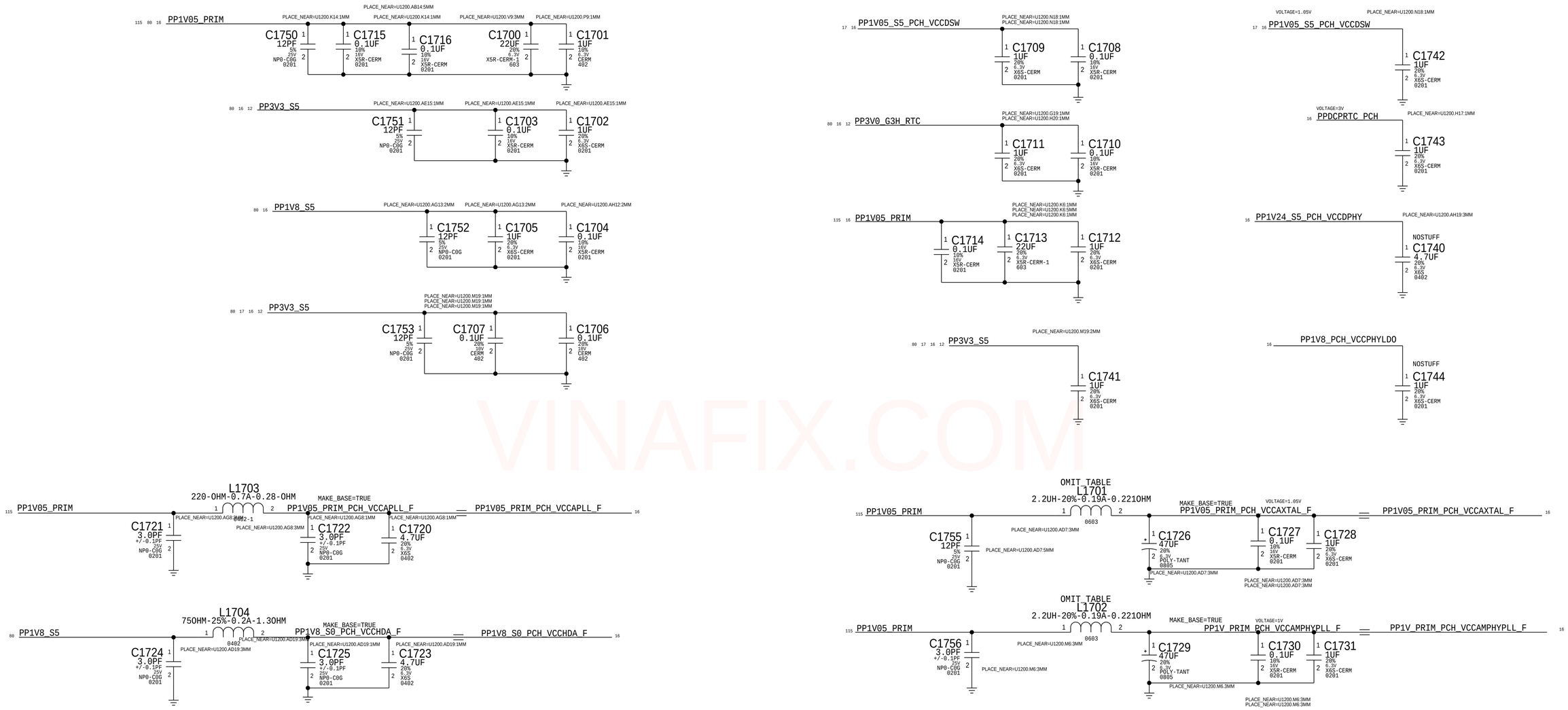

PART NUMBER	QTY	DESCRIPTION	REFERENCE DES	CRITICAL	BOM OPTION
113S0022	2	RES,MF,1A MAX,00HM,5%,0603	L1701,L1702		

Current data from LPT EDS (doc #486708, Rev 1.0).

BOM_COST_GROUP=CPU & CHIPSET

PAGE TITLE
PCH Decoupling

Apple Inc.

DRAWING NUMBER 051-02643 SIZE D
REVISION 4.0.0
BRANCH evt-0
PAGE 17 OF 200
SHEET 17 OF 131

NOTICE OF PROPRIETARY PROPERTY:
THE INFORMATION CONTAINED HEREIN IS THE PROPRIETARY PROPERTY OF APPLE INC.
THE POSESSOR AGREES TO THE FOLLOWING:
I TO MAINTAIN THIS DOCUMENT IN CONFIDENCE
II NOT TO REPRODUCE OR COPY IT
III NOT TO REVEAL OR PUBLISH IT IN WHOLE OR PART
IV ALL RIGHTS RESERVED

VINAFIX.COM

Primary / Merged (CPU/PCH) Micro2-XDP

Extra BPM Testpoints

XDP_BPM_L<0> — TP1800
XDP_BPM_L<1> — TP1801
XDP_BPM_L<2> — TP1802
XDP_BPM_L<3> — TP1803

PCH XDP Signals

These signals do not connect to the Primary (Merged) XDP connector in this architecture.
The PDG puts them on a secondary XDP connector that is only needed in some PCH debugging situation.
They are listed here to show their secondary XDP functions and to provide test points for signals that are not used elsewhere.

PCH/XDP Signals

XDP_PCH_OBSDATA_A0	TP1810
XDP_PCH_OBSDATA_A1	TP1811
XDP_PCH_OBSDATA_A2	TP1812
XDP_PCH_OBSDATA_A3	TP1813
XDP_PCH_OBSDATA_B0	TP1814
XDP_PCH_OBSDATA_B1	TP1815
XDP_PCH_OBSDATA_B2	TP1816
XDP_PCH_OBSDATA_B3	TP1817
XDP_PCH_OBSFN_C0	TP1818
XDP_USB_EXTA_OC_L	TP1820
XDP_USB_EXTB_OC_L	TP1821
XDP_USB_EXTC_OC_L	TP1822
XDP_USB_EXTD_OC_L	TP1823
XDP_PCH_OBSDATA_D0	TP1824
XDP_PCH_OBSDATA_D1	TP1825

Non-XDP Signals

XDP_JTAG_ISP_TDO	TP1819
XDP_JTAG_ISP_TCK	TP1826
XDP_JTAG_ISP_TDI	TP1827

Unused GPIOs have TPs.

USB Overcurrents are aliased, do not cause USB OC# events during PCH debug.

JTAG_ISP (non-TMS) nets are aliased, do not attempt bit-banged JTAG during PCH debug.

NOTE: This is not the standard XDP pinout.
Use with 921-0133 Adapter Flex to
support chipset debug.

XDP_CONN
J1800
DF40RC-60DP-0.4V
M-ST-SM1
518S0847

PP1V05_PRIM

PULL CFG<3> LOW WHEN XDP PRESENT
R1801 1.5K 5% 1/20W MF 201 — XDP:YES NO_XNET_CONNECTION
PLACE_NEAR=J1800.2:5MM

XDP_PRESENT_CPU
XDP_CPU_PREQ_L
XDP_CPU_PRDY_L
CPU_CFG<0>
CPU_CFG<1>
CPU_CFG<2>
CPU_CFG<3>
CPU_CFG<4>
CPU_CFG<5>
CPU_CFG<6>
CPU_CFG<7>
XDP_PM_RSMRST_L
XDP_CPU_PWRBTN_L
SPI_MOSI_R_CONN
XDP_PCH_TCK

PP3V3_S5
R1804 1K 5% 1/20W MF 201 — XDP:YES
PLACE_NEAR=J1800.48:2.54MM

PM_RSMRST_L — R1800 1K — XDP:YES — PLACE_NEAR=U1200.H25:2.54MM
PM_PWRBTN_L — R1802 10 — XDP:YES — PLACE_NEAR=U1200.K22:5MM
SPI_MOSI_R — R1803 1.5K — XDP:YES — PLACE_NEAR=U1200.D21:10MM
XDP_CPU_TCK
XDP_PCH_JTAGX — R1835 0 — XDP:YES — PLACE_NEAR=J1800.58:28MM

C1804 0.1UF 10% 6.3V CERM-X5R 0201 — XDP:YES — PLACE_NEAR=J1800.44:28MM
C1800 0.1UF 10% 6.3V CERM-X5R 0201 — XDP:YES — PLACE_NEAR=J1800.42:28MM
C1801 0.1UF 10% 6.3V CERM-X5R 0201 — XDP:YES — PLACE_NEAR=J1800.43:28MM
C1806 0.1UF 10% 6.3V CERM-X5R 0201 — XDP:YES — PLACE_NEAR=J1800.47:28MM

OBSFN_C0	CPU_CFG<17>	
OBSFN_C1	CPU_CFG<16>	
OBSDATA_C0	CPU_CFG<8>	
OBSDATA_C1	CPU_CFG<9>	
OBSDATA_C2	CPU_CFG<10>	
OBSDATA_C3	CPU_CFG<11>	
OBSFN_D0	CPU_CFG<19>	
OBSFN_D1	CPU_CFG<18>	
OBSDATA_D0	CPU_CFG<12>	
OBSDATA_D1	CPU_CFG<13>	
OBSDATA_D2	CPU_CFG<14>	
OBSDATA_D3	CPU_CFG<15>	
ITPCLK/HOOK4	NC_ITPXDP_CLK100MP	
ITPCLK#/HOOK5	NC_ITPXDP_CLK100MN	
VCC_OBS_CD		
RESET#/HOOK6	PCH_ITP_PMODE	
DBR#/HOOK7	XDP_DBRESET_L	
TDO		
TRSTn		
TDI		
TMS		
XDP_PRESENT#		

NC: OBSFN_B0, OBSFN_B1, HOOK0, HOOK1, VCC_OBS_AB, HOOK2, HOOK3, SDA, SCL, TCK1, TCK0

R1830 1K 5% 1/20W MF 201 — PLACE_NEAR=U0500.E8:2.54MM

PP1V05_S0SW

XDP_PCH_TDO	R1890	100	XDP:YES
XDP_PCH_TDI	R1891	51	XDP:YES
XDP_PCH_TMS	R1892	51	XDP:YES
XDP_CPU_TDO	R1810	100	XDP:YES
XDP_CPU_TCK	R1813	51	XDP:YES
XDP_PCH_TCK	R1897	51	NOSTUFF
XDP_PCH_TRST_L (PROPER WAY TO TERMINATE?)	R1898	51	NOSTUFF

PLACE_NEAR=U1200.AM16:28MM; PLACE_NEAR=U1200.AR18:28MM; PLACE_NEAR=U1200.AL14:28MM; PLACE_NEAR=U0500.BT28:28MM; PLACE_NEAR=U0500.BR28:28MM; PLACE_NEAR=U1200.AP17:28MM

R1806 0 5% 1/20W MF 0201 — XDP:YES — PM_SYSRST_L

ROUTE IN STAR TOPOLOGY FROM XDP CONNECTOR.

R1821	0	PLACE_NEAR=J1800.51:2.54MM	XDP_CPU_TDO
R1822	0	PLACE_NEAR=J1800.53:2.54MM	XDP_CPU_TRST_L
R1823	0	PLACE_NEAR=J1800.55:2.54MM	XDP_CPU_TDI
R1824	0	PLACE_NEAR=J1800.57:2.54MM	XDP_CPU_TMS

XDP_PCH_TDO
XDP_PCH_TRST_L
XDP_PCH_TDI
XDP_PCH_TMS

PP1V8_S5
C1830 0.1UF 10% 10V X5R-CERM 0201 — XDP:YES
U1830 74AUP1G07GF SOT891 — XDP:YES
VCC, A, Y, (OD), NC, GND
SPI_IO2_STRAP_L — R1831 1.5K 5% 1/20W MF 201 — XDP:YES NO_XNET_CONNECTION — SPI_IO<2> (STRAP TO PCH)
R1832 49.9 1% 1/20W MF 201 — NOSTUFF — PLACE_NEAR=U1830.4:2.54MM — NO_XNET_CONNECTION
XDP_PRESENT_L

PP1V8_S5 — R1850 100K 5% 1/20W MF 201 — XDP:YES

NEED TO CONNECT TO VCCST, *STG POWER LOGIC

BOM_COST_GROUP=DEBUG

DESIGN: X502/MLB	
LAST CHANGE: Mon Jun 15 22:04:28 2015	
PAGE TITLE: CPU/PCH Merged XDP	
Apple Inc.	DRAWING NUMBER: 051-02643 — SIZE: D
	REVISION: 4.0.0
	BRANCH: evt-0
	PAGE: 18 OF 200
	SHEET: 18 OF 131

NOTICE OF PROPRIETARY PROPERTY:
THE INFORMATION CONTAINED HEREIN IS THE PROPRIETARY PROPERTY OF APPLE INC.
THE POSESSOR AGREES TO THE FOLLOWING:
I TO MAINTAIN THIS DOCUMENT IN CONFIDENCE
II NOT TO REPRODUCE OR COPY IT
III NOT TO REVEAL OR PUBLISH IT IN WHOLE OR PART
IV ALL RIGHTS RESERVED

VINAFIX.COM

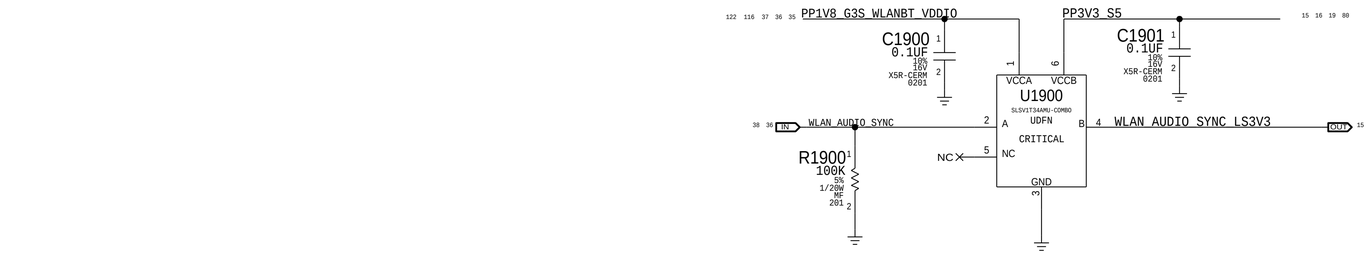

Will be reomved

PCIE CLKREQS

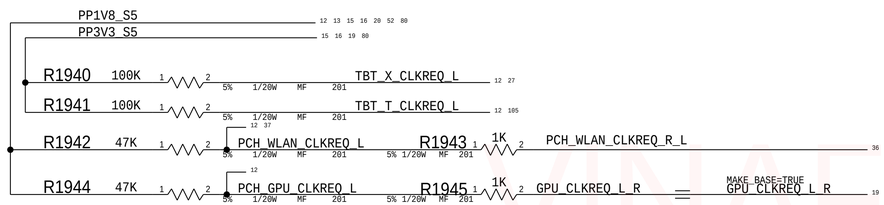

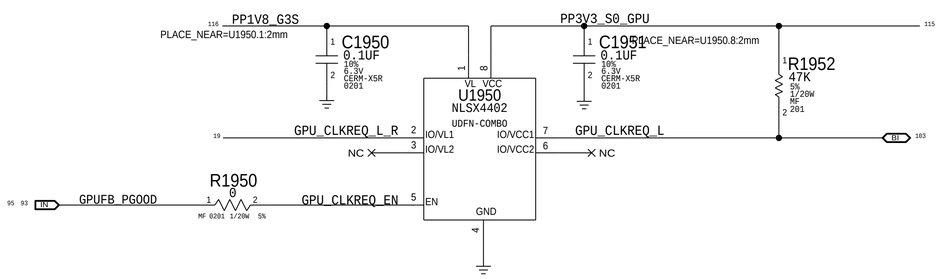

VINAFIX.COM

BOM_COST_GROUP=CPU & CHIPSET

PAGE TITLE
Chipset Support 1

Apple Inc.

DRAWING NUMBER 051-02643
SIZE D
REVISION 4.0.0
BRANCH evt-0
PAGE 19 OF 200
SHEET 19 OF 131

NOTICE OF PROPRIETARY PROPERTY:
THE INFORMATION CONTAINED HEREIN IS THE PROPRIETARY PROPERTY OF APPLE INC.
THE POSESSOR AGREES TO THE FOLLOWING:
I TO MAINTAIN THIS DOCUMENT IN CONFIDENCE
II NOT TO REPRODUCE OR COPY IT
III NOT TO REVEAL OR PUBLISH IT IN WHOLE OR PART
IV ALL RIGHTS RESERVED

NC ALIASES 3

12 NC_PCH_CLK32K_RTCX2 — MAKE_BASE=TRUE NC_PCH_CLK32K_RTCX2

SIGNAL ALIASES

13 PCH_DISPA_BCLK — MAKE_BASE=TRUE PCH_DISPA_BCLK 5
13 PCH_DISPA_SDI — MAKE_BASE=TRUE PCH_DISPA_SDI 5
13 PCH_DISPA_SDO — MAKE_BASE=TRUE PCH_DISPA_SDO 5

118 18 NC_ITPXDP_CLK100MN — TRUE NC_ITPXDP_CLK100MN
118 18 NC_ITPXDP_CLK100MP — TRUE NC_ITPXDP_CLK100MP

Platform Reset Connections

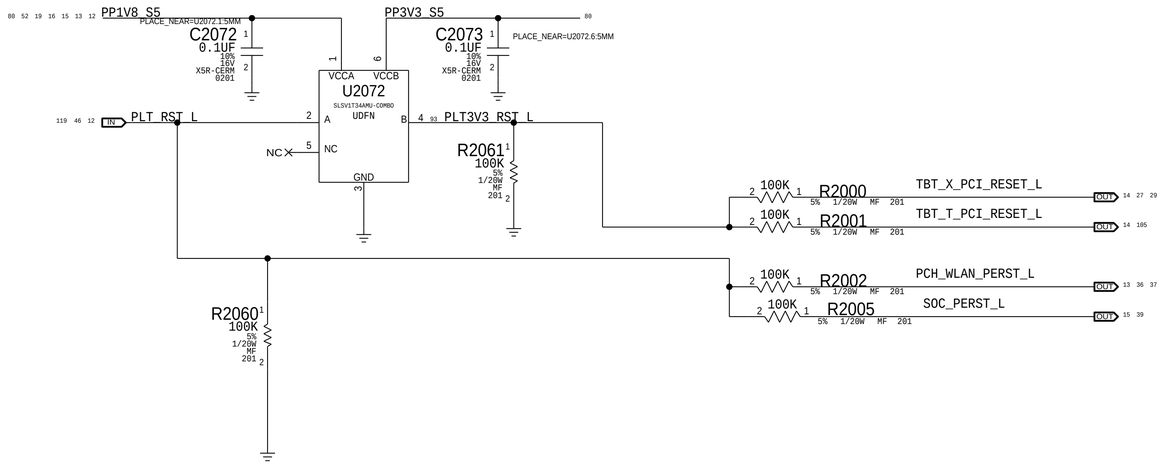

eSPI Analyzer
Placement study first

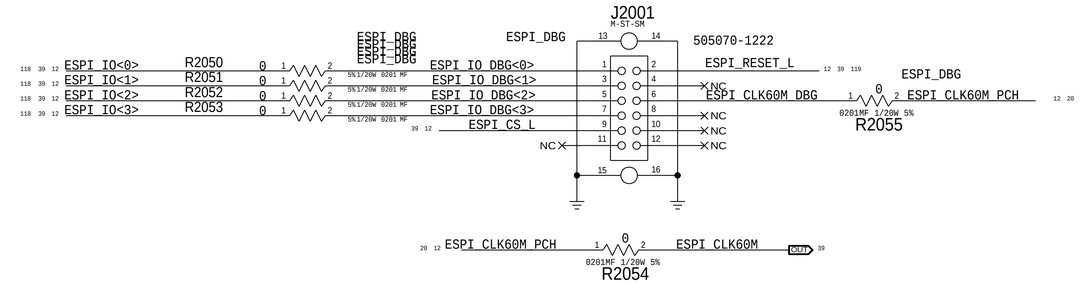

VINAFIX.COM

BOM_COST_GROUP=CPU & CHIPSET

PAGE TITLE
Chipset Support 2

Apple Inc.

DRAWING NUMBER 051-02643 SIZE D
REVISION 4.0.0
BRANCH evt-0
PAGE 20 OF 200
SHEET 20 OF 131

NOTICE OF PROPRIETARY PROPERTY:
THE INFORMATION CONTAINED HEREIN IS THE PROPRIETARY PROPERTY OF APPLE INC.
THE POSESSOR AGREES TO THE FOLLOWING:
I TO MAINTAIN THIS DOCUMENT IN CONFIDENCE
II NOT TO REPRODUCE OR COPY IT
III NOT TO REVEAL OR PUBLISH IT IN WHOLE OR PART
IV ALL RIGHTS RESERVED

CPU-Based Margining
VRef Dividers

```
DDR4 VDDQ = 1.2V
----------------
MIMINUM Step Size = 0.50% * VDDQ = 6.0mV per step
TYPICAL Step Size = 0.65% * VDDQ = 7.8mV per step
MAXIMUM Step Size = 0.80% * VDDQ = 9.6mV per step

 KBL PLATFORM GUIDE Page.102 FOR DDR4 X8 MEMORY DOWN
 ---------------------------------------------------
 DDR0_VREF_DQ = Not Used
 DDR1_VREF_DQ = Reference For Channel B
 DDR_VREF_CA = Reference For Channel A
```

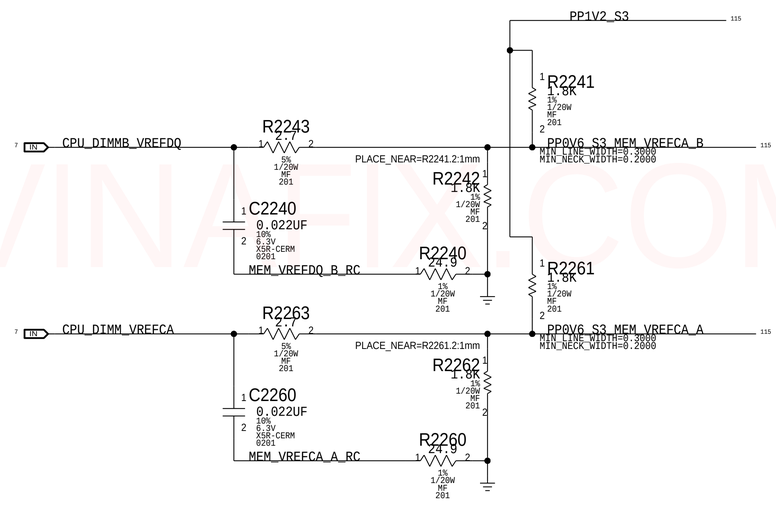

BOM_COST_GROUP=DRAM

PAGE TITLE	DDR4 VREF Margining
Apple Inc.	DRAWING NUMBER 051-02643 — SIZE D
	REVISION 4.0.0
NOTICE OF PROPRIETARY PROPERTY: THE INFORMATION CONTAINED HEREIN IS THE PROPRIETARY PROPERTY OF APPLE INC. THE POSESSOR AGREES TO THE FOLLOWING: I TO MAINTAIN THIS DOCUMENT IN CONFIDENCE II NOT TO REPRODUCE OR COPY IT III NOT TO REVEAL OR PUBLISH IT IN WHOLE OR PART IV ALL RIGHTS RESERVED	BRANCH evt-0
	PAGE 22 OF 200
	SHEET 21 OF 131

VINA-FIX.COM

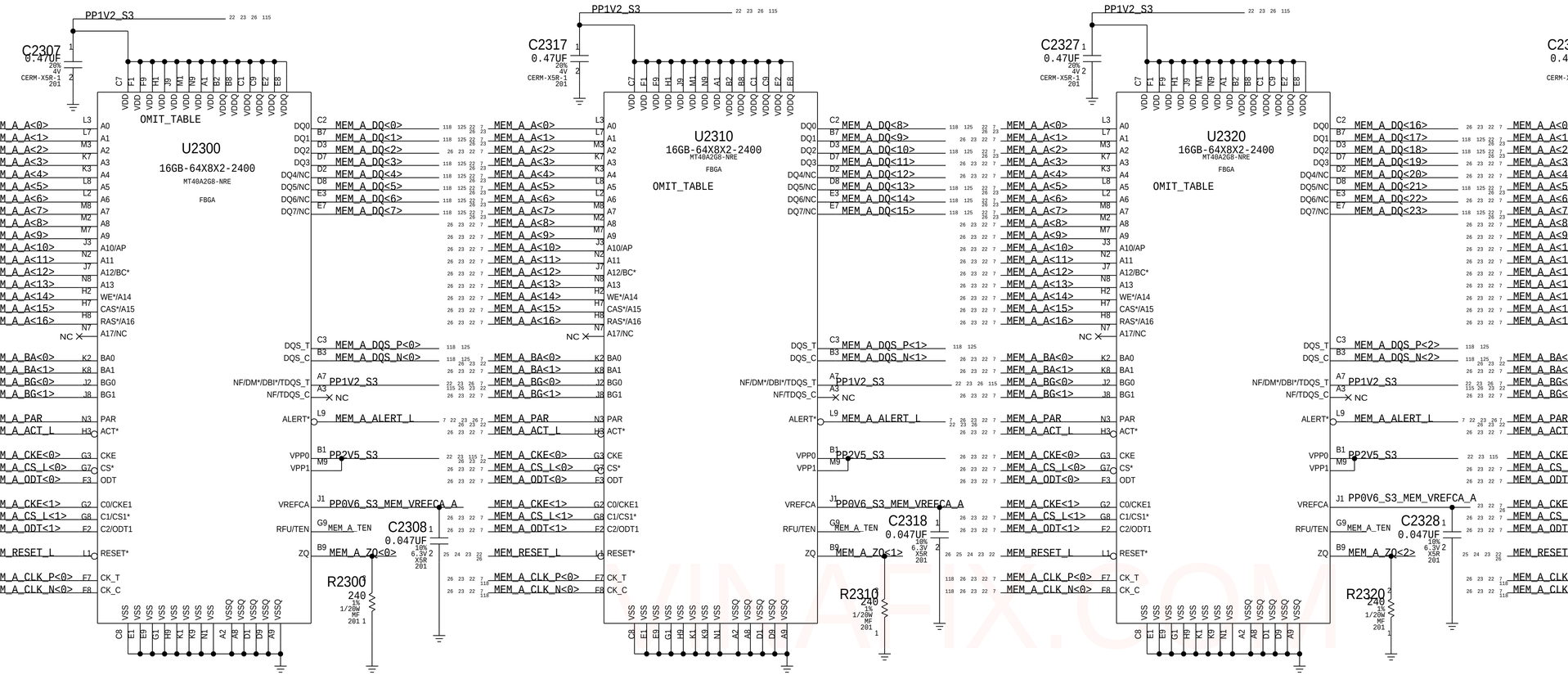

PP2V5_S3

Vpp Bypassing Placeholder (NOTE: 4x 1uF per chip)

C2350 1.00UF 20% 6.3V X5R 0201-1
C2351 1.00UF 20% 6.3V X5R 0201-1
C2352 1.00UF 20% 6.3V X5R 0201-1
C2353 1.00UF 20% 6.3V X5R 0201-1
C2354 1.00UF 20% 6.3V X5R 0201-1
C2355 1.00UF 20% 6.3V X5R 0201-1
C2356 1.00UF 20% 6.3V X5R 0201-1
C2357 1.00UF 20% 6.3V X5R 0201-1
C2358 1.00UF 20% 6.3V X5R 0201-1
C2359 1.00UF 20% 6.3V X5R 0201-1
C2360 1.00UF 20% 6.3V X5R 0201-1
C2361 1.00UF 20% 6.3V X5R 0201-1
C2362 1.00UF 20% 6.3V X5R 0201-1
C2363 1.00UF 20% 6.3V X5R 0201-1
C2364 1.00UF 20% 6.3V X5R 0201-1
C2365 1.00UF 20% 6.3V X5R 0201-1

PP1V2_S3

VDD/VDDQ Bypassing (NOTE: 4x 2.2uF and 5x 0.1uF per chip)

C2300 2.2UF 20% 6.3V X5R-CERM 0201
C2301 2.2UF 20% 6.3V X5R-CERM 0201
C2302 2.2UF 20% 6.3V X5R-CERM 0201
C2303 2.2UF 20% 6.3V X5R-CERM 0201
C2310 2.2UF 20% 6.3V X5R-CERM 0201
C2311 2.2UF 20% 6.3V X5R-CERM 0201
C2312 2.2UF 20% 6.3V X5R-CERM 0201
C2313 2.2UF 20% 6.3V X5R-CERM 0201
C2304 0.1UF 10% 6.3V CERM-X5R 0201
C2305 0.1UF 10% 6.3V CERM-X5R 0201
C2306 0.1UF 10% 6.3V CERM-X5R 0201
C2370 0.1UF 10% 6.3V CERM-X5R 0201
C2309 0.1UF 10% 6.3V CERM-X5R 0201
C2314 0.1UF 10% 6.3V CERM-X5R 0201
C2315 0.1UF 10% 6.3V CERM-X5R 0201
C2316 0.1UF 10% 6.3V CERM-X5R 0201
C2371 0.1UF 10% 6.3V CERM-X5R 0201
C2319 0.1UF 10% 6.3V CERM-X5R 0201

PP1V2_S3

C2320 2.2UF 20% 6.3V X5R-CERM 0201
C2321 2.2UF 20% 6.3V X5R-CERM 0201
C2322 2.2UF 20% 6.3V X5R-CERM 0201
C2323 2.2UF 20% 6.3V X5R-CERM 0201
C2330 2.2UF 20% 6.3V X5R-CERM 0201
C2331 2.2UF 20% 6.3V X5R-CERM 0201
C2332 2.2UF 20% 6.3V X5R-CERM 0201
C2333 2.2UF 20% 6.3V X5R-CERM 0201
C2324 0.1UF 10% 6.3V CERM-X5R 0201
C2325 0.1UF 10% 6.3V CERM-X5R 0201
C2326 0.1UF 10% 6.3V CERM-X5R 0201
C2372 0.1UF 10% 6.3V CERM-X5R 0201
C2329 0.1UF 10% 6.3V CERM-X5R 0201
C2334 0.1UF 10% 6.3V CERM-X5R 0201
C2335 0.1UF 10% 6.3V CERM-X5R 0201
C2336 0.1UF 10% 6.3V CERM-X5R 0201
C2373 0.1UF 10% 6.3V CERM-X5R 0201
C2339 0.1UF 10% 6.3V CERM-X5R 0201

PP1V2_S3

5x 0.1uF per chip

C2380 0.1UF 10% 6.3V CERM-X5R 0201
C2381 0.1UF 10% 6.3V CERM-X5R 0201
C2382 0.1UF 10% 6.3V CERM-X5R 0201
C2383 0.1UF 10% 6.3V CERM-X5R 0201
C2384 0.1UF 10% 6.3V CERM-X5R 0201
C2385 0.1UF 10% 6.3V CERM-X5R 0201
C2386 0.1UF 10% 6.3V CERM-X5R 0201
C2387 0.1UF 10% 6.3V CERM-X5R 0201
C2388 0.1UF 10% 6.3V CERM-X5R 0201
C2389 0.1UF 10% 6.3V CERM-X5R 0201
C2390 0.1UF 10% 6.3V CERM-X5R 0201
C2391 0.1UF 10% 6.3V CERM-X5R 0201
C2392 0.1UF 10% 6.3V CERM-X5R 0201
C2393 0.1UF 10% 6.3V CERM-X5R 0201
C2394 0.1UF 10% 6.3V CERM-X5R 0201
C2395 0.1UF 10% 6.3V CERM-X5R 0201
C2396 0.1UF 10% 6.3V CERM-X5R 0201
C2397 0.1UF 10% 6.3V CERM-X5R 0201
C2398 0.1UF 10% 6.3V CERM-X5R 0201
C2399 0.1UF 10% 6.3V CERM-X5R 0201

BOM_COST_GROUP=DRAM

PAGE TITLE
DDR4 SDRAM Channel A 1

Apple Inc.

DRAWING NUMBER 051-02643 SIZE D
REVISION 4.0.0
BRANCH evt-0
PAGE 23 OF 200
SHEET 22 OF 131

NOTICE OF PROPRIETARY PROPERTY:
THE INFORMATION CONTAINED HEREIN IS THE PROPRIETARY PROPERTY OF APPLE INC.
THE POSESSOR AGREES TO THE FOLLOWING:
I TO MAINTAIN THIS DOCUMENT IN CONFIDENCE
II NOT TO REPRODUCE OR COPY IT
III NOT TO REVEAL OR PUBLISH IT IN WHOLE OR PART
IV ALL RIGHTS RESERVED

WINAFIX.COM
RepairLap.com

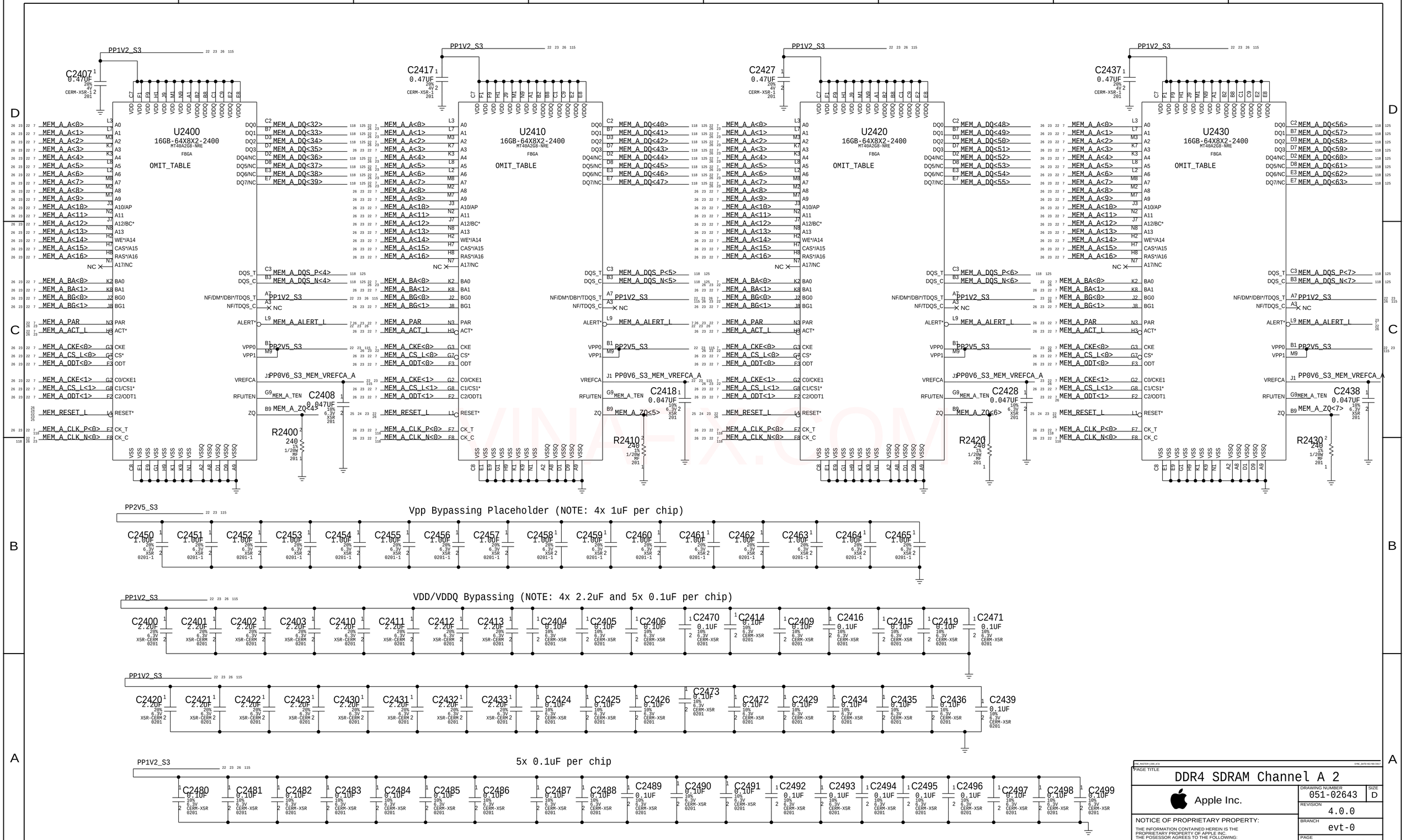

PAGE TITLE

DDR4 SDRAM Channel A 2

Apple Inc.

DRAWING NUMBER	051-02643
SIZE	D
REVISION	4.0.0
BRANCH	evt-0
PAGE	24 OF 200
SHEET	23 OF 131

NOTICE OF PROPRIETARY PROPERTY:
THE INFORMATION CONTAINED HEREIN IS THE PROPRIETARY PROPERTY OF APPLE INC.
THE POSESSOR AGREES TO THE FOLLOWING:
I TO MAINTAIN THIS DOCUMENT IN CONFIDENCE
II NOT TO REPRODUCE OR COPY IT
III NOT TO REVEAL OR PUBLISH IT IN WHOLE OR PART
IV ALL RIGHTS RESERVED

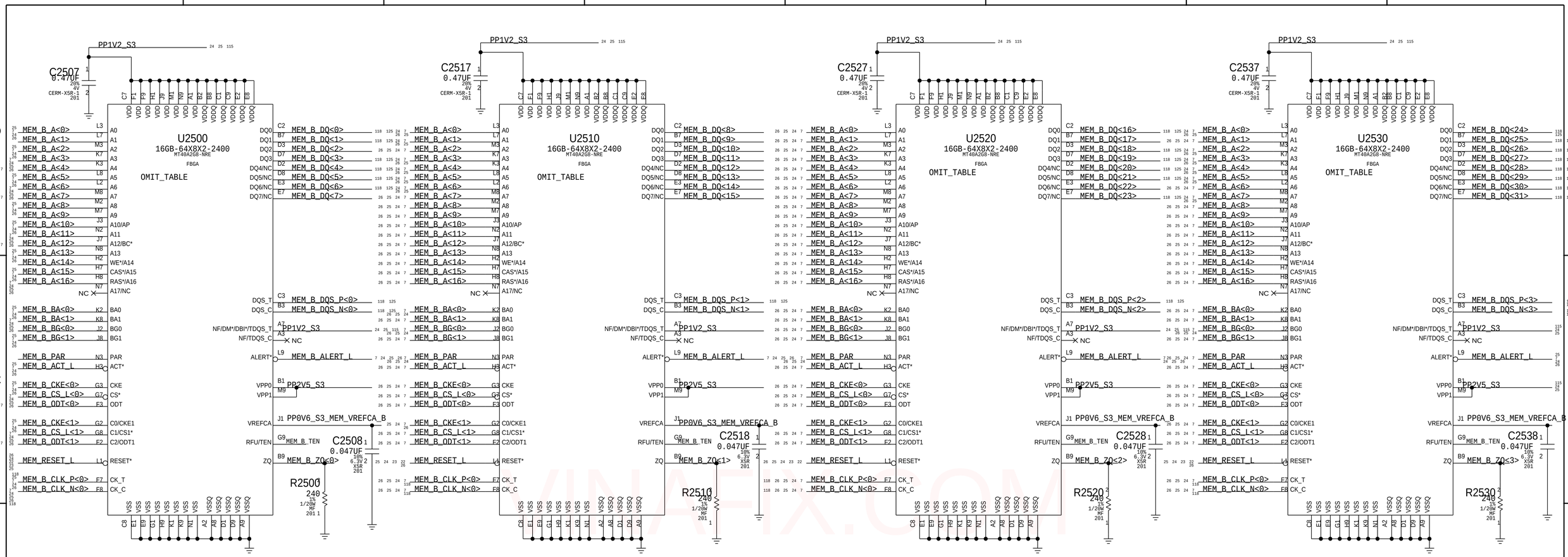

Vpp Bypassing Placeholder (NOTE: 4x 1uF per chip)

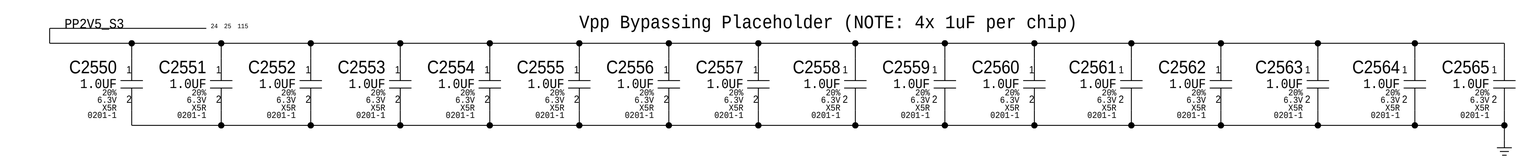

VDD/VDDQ Bypassing (NOTE: 4x 2.2uF and 5x 0.1uF per chip)

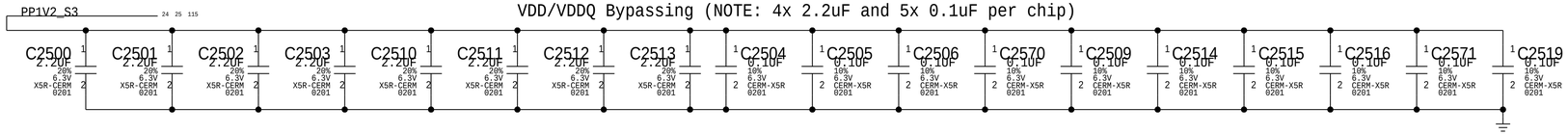

VDD/VDDQ Bypassing (NOTE: 2x 2.2uF and 3x 0.1uF per chip)

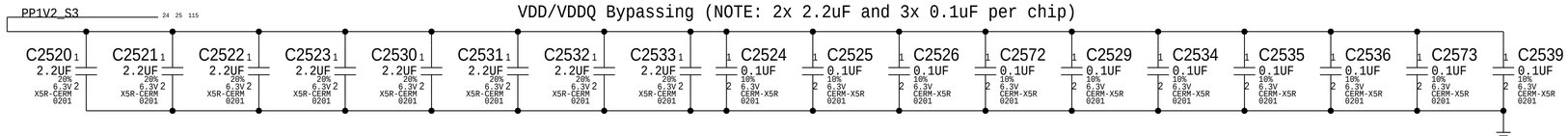

5x 0.1uF per chip

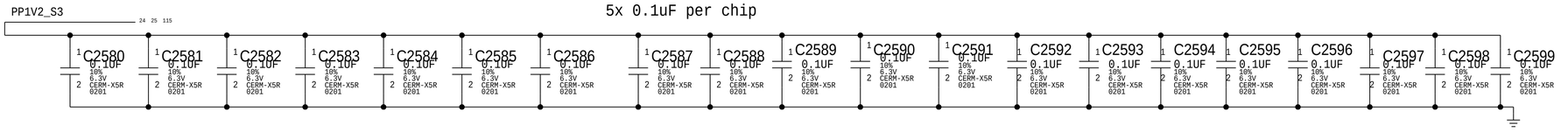

BOM_COST_GROUP=DRAM

PAGE TITLE	DDR4 SDRAM Channel B 1
Apple Inc.	DRAWING NUMBER 051-02643 SIZE D
	REVISION 4.0.0
	BRANCH evt-0
	PAGE 25 OF 200
	SHEET 24 OF 131

NOTICE OF PROPRIETARY PROPERTY:
THE INFORMATION CONTAINED HEREIN IS THE PROPRIETARY PROPERTY OF APPLE INC.
THE POSESSOR AGREES TO THE FOLLOWING:
I TO MAINTAIN THIS DOCUMENT IN CONFIDENCE
II NOT TO REPRODUCE OR COPY IT
III NOT TO REVEAL OR PUBLISH IT IN WHOLE OR PART
IV ALL RIGHTS RESERVED

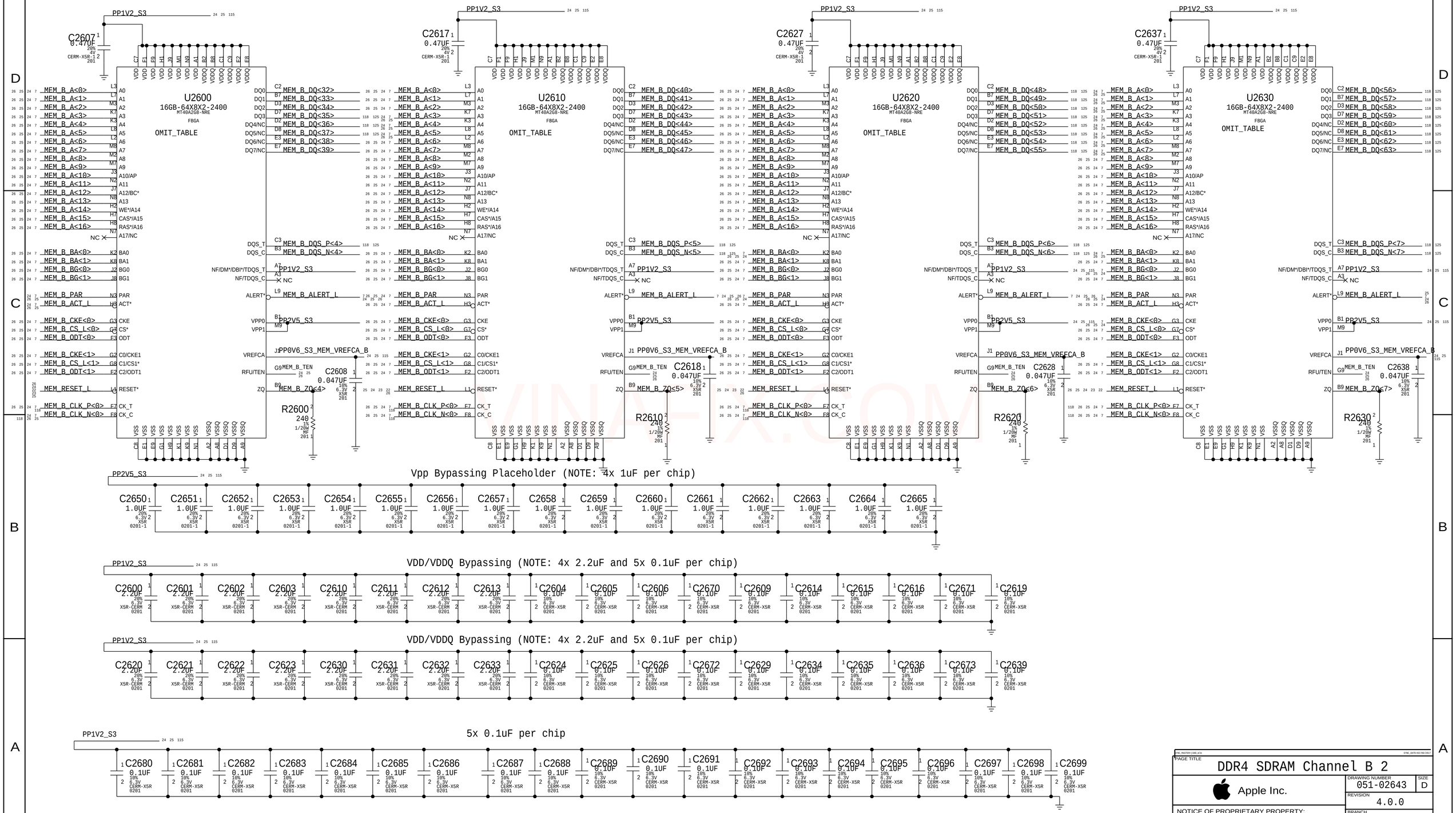

PAGE TITLE

DDR4 SDRAM Channel B 2

Apple Inc.

DRAWING NUMBER	051-02643
SIZE	D
REVISION	4.0.0
BRANCH	evt-0
PAGE	26 OF 200
SHEET	25 OF 131

NOTICE OF PROPRIETARY PROPERTY:
THE INFORMATION CONTAINED HEREIN IS THE PROPRIETARY PROPERTY OF APPLE INC.
THE POSESSOR AGREES TO THE FOLLOWING:
I TO MAINTAIN THIS DOCUMENT IN CONFIDENCE
II NOT TO REPRODUCE OR COPY IT
III NOT TO REVEAL OR PUBLISH IT IN WHOLE OR PART
IV ALL RIGHTS RESERVED

JEDEC 4.20.18 Unbuffered SODIMM Raw Card F spec recommends 36 Ohm term to VTT for CS,CKE,ODT and 36 Ohm for BA,A,RAS,CAS,WE

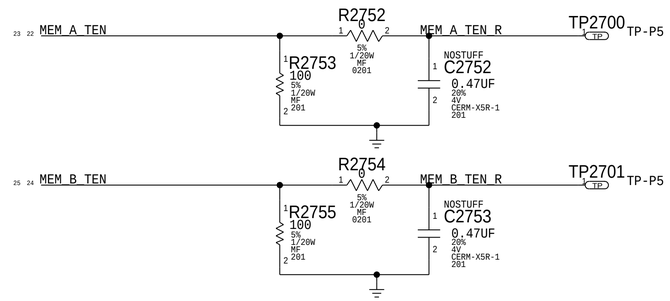

MEM Clock Termination

Place RC end termination after last DRAM
Place Source Cterm at neckdown at first DRAM

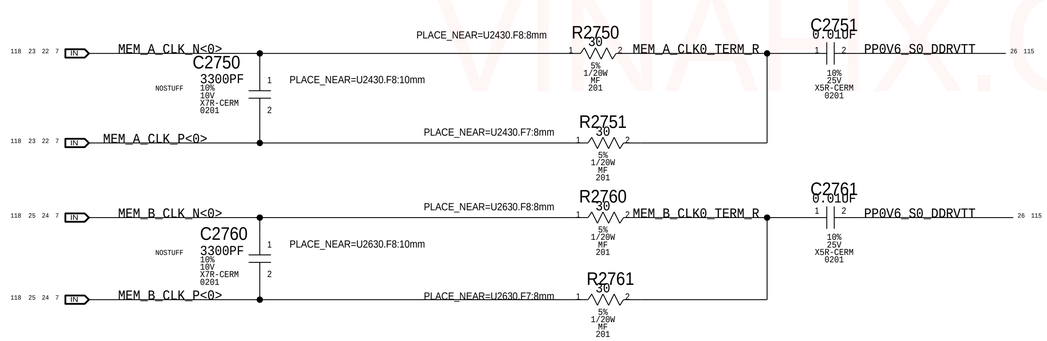

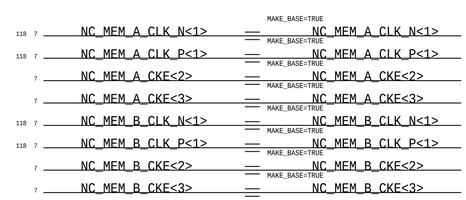

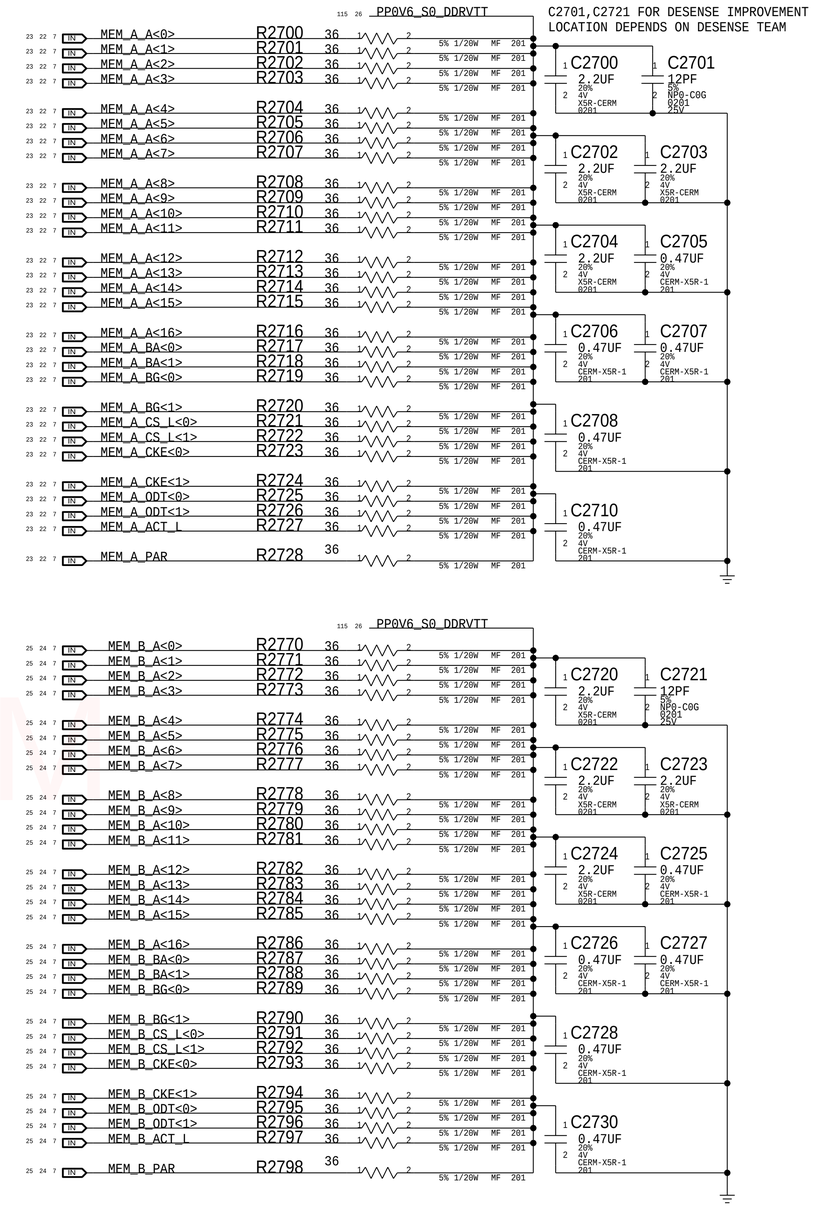

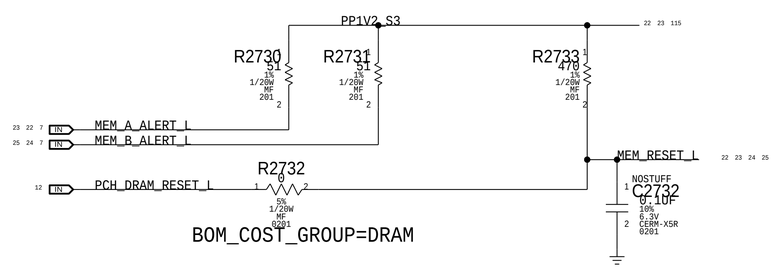

VINAFIX.COM

PAGE TITLE: DDR4 Termination

Apple Inc.

DRAWING NUMBER: 051-02643 SIZE: D
REVISION: 4.0.0
BRANCH: evt-0
PAGE: 27 OF 200
SHEET: 26 OF 131

NOTICE OF PROPRIETARY PROPERTY:
THE INFORMATION CONTAINED HEREIN IS THE PROPRIETARY PROPERTY OF APPLE INC.
THE POSESSOR AGREES TO THE FOLLOWING:
I TO MAINTAIN THIS DOCUMENT IN CONFIDENCE
II NOT TO REPRODUCE OR COPY IT
III NOT TO REVEAL OR PUBLISH IT IN WHOLE OR PART
IV ALL RIGHTS RESERVED

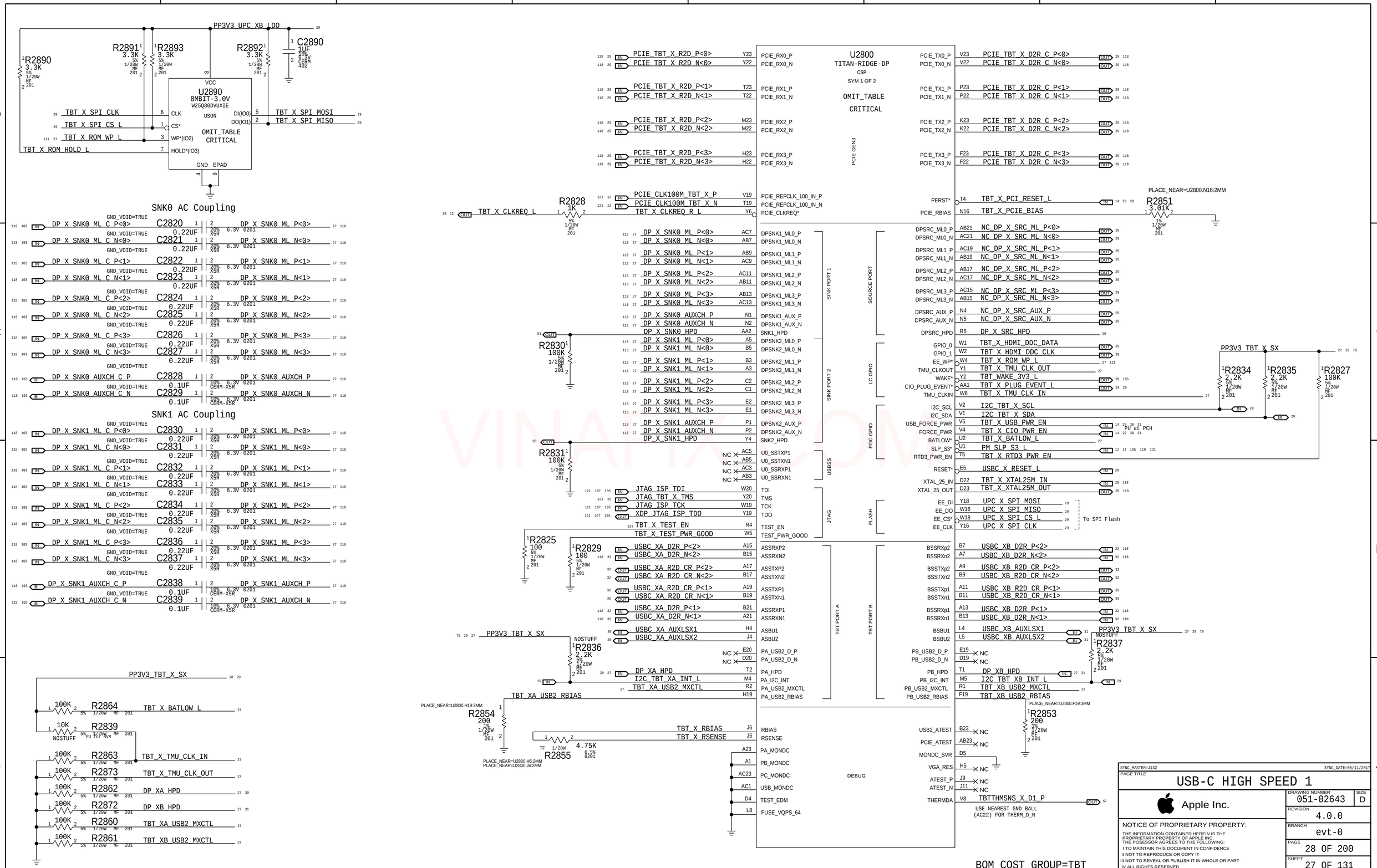
PP3V3_UPC_XB_LDO
R2890 3.3K
R2891 3.3K
R2893 3.3K
R2892 3.3K
C2890 1UF
U2890 8MBIT-3.0V W25Q80DVUXIE USON
OMIT_TABLE CRITICAL
TBT_X_SPI_CLK
TBT_X_SPI_CS_L
TBT_X_ROM_WP_L
TBT_X_ROM_HOLD_L
TBT_X_SPI_MOSI
TBT_X_SPI_MISO
SNK0 AC Coupling
SNK1 AC Coupling
U2800 TITAN-RIDGE-DP CSP SYM 1 OF 2
OMIT_TABLE CRITICAL
PCIE GEN3
SINK PORT 1
SINK PORT 2
SOURCE PORT
LC GPIO
POC GPIO
USBSS
JTAG
FLASH
TBT PORT A
TBT PORT B
DEBUG
PCIE_TBT_X_R2D_P<0>
PCIE_TBT_X_R2D_N<0>
PCIE_TBT_X_R2D_P<1>
PCIE_TBT_X_R2D_N<1>
PCIE_TBT_X_R2D_P<2>
PCIE_TBT_X_R2D_N<2>
PCIE_TBT_X_R2D_P<3>
PCIE_TBT_X_R2D_N<3>
PCIE_TBT_X_D2R_C_P<0>
PCIE_TBT_X_D2R_C_N<0>
PCIE_TBT_X_D2R_C_P<1>
PCIE_TBT_X_D2R_C_N<1>
PCIE_TBT_X_D2R_C_P<2>
PCIE_TBT_X_D2R_C_N<2>
PCIE_TBT_X_D2R_C_P<3>
PCIE_TBT_X_D2R_C_N<3>
PCIE_CLK100M_TBT_X_P
PCIE_CLK100M_TBT_X_N
TBT_X_CLKREQ_L
TBT_X_PCI_RESET_L
TBT_X_PCIE_BIAS
PLACE_NEAR=U2800.N16:2MM
R2851 3.01K
DP_X_SNK0_ML_C_P<0>
DP_X_SNK0_ML_C_N<0>
DP_X_SNK0_ML_C_P<1>
DP_X_SNK0_ML_C_N<1>
DP_X_SNK0_ML_C_P<2>
DP_X_SNK0_ML_C_N<2>
DP_X_SNK0_ML_C_P<3>
DP_X_SNK0_ML_C_N<3>
DP_X_SNK0_AUXCH_C_P
DP_X_SNK0_AUXCH_C_N
DP_X_SNK1_ML_C_P<0>
DP_X_SNK1_ML_C_N<0>
DP_X_SNK1_ML_C_P<1>
DP_X_SNK1_ML_C_N<1>
DP_X_SNK1_ML_C_P<2>
DP_X_SNK1_ML_C_N<2>
DP_X_SNK1_ML_C_P<3>
DP_X_SNK1_ML_C_N<3>
DP_X_SNK1_AUXCH_C_P
DP_X_SNK1_AUXCH_C_N
R2830 100K
R2831 100K
JTAG_ISP_TDI
JTAG_TBT_X_TMS
JTAG_ISP_TCK
XDP_JTAG_ISP_TDO
TBT_X_TEST_EN
TBT_X_TEST_PWR_GOOD
R2825 100
R2829 100
USBC_XA_D2R_P<2>
USBC_XA_D2R_N<2>
USBC_XA_R2D_CR_P<2>
USBC_XA_R2D_CR_N<2>
USBC_XA_R2D_CR_P<1>
USBC_XA_R2D_CR_N<1>
USBC_XA_D2R_P<1>
USBC_XA_D2R_N<1>
USBC_XA_AUXLSX1
USBC_XA_AUXLSX2
PP3V3_TBT_X_SX
R2836 2.2K
DP_XA_HPD
I2C_TBT_XA_INT_L
TBT_XA_USB2_MXCTL
TBT_XA_USB2_RBIAS
R2854 200
R2855 4.75K
TBT_X_RBIAS
TBT_X_RSENSE
R2864 100K TBT_X_BATLOW_L
R2839 10K NOSTUFF
R2863 100K TBT_X_TMU_CLK_IN
R2873 100K TBT_X_TMU_CLK_OUT
R2862 100K DP_XA_HPD
R2872 100K DP_XB_HPD
R2860 100K TBT_XA_USB2_MXCTL
R2861 100K TBT_XB_USB2_MXCTL
NC_DP_X_SRC_ML_P<0>
NC_DP_X_SRC_ML_N<0>
NC_DP_X_SRC_ML_P<1>
NC_DP_X_SRC_ML_N<1>
NC_DP_X_SRC_ML_P<2>
NC_DP_X_SRC_ML_N<2>
NC_DP_X_SRC_ML_P<3>
NC_DP_X_SRC_ML_N<3>
NC_DP_X_SRC_AUX_P
NC_DP_X_SRC_AUX_N
DP_X_SRC_HPD
TBT_X_HDMI_DDC_DATA
TBT_X_HDMI_DDC_CLK
TBT_X_ROM_WP_L
TBT_X_TMU_CLK_OUT
TBT_WAKE_3V3_L
TBT_X_PLUG_EVENT_L
TBT_X_TMU_CLK_IN
I2C_TBT_X_SCL
I2C_TBT_X_SDA
TBT_X_USB_PWR_EN
TBT_X_CIO_PWR_EN
TBT_X_BATLOW_L
PM_SLP_S3_L
TBT_X_RTD3_PWR_EN
USBC_X_RESET_L
TBT_X_XTAL25M_IN
TBT_X_XTAL25M_OUT
UPC_X_SPI_MOSI
UPC_X_SPI_MISO
UPC_X_SPI_CS_L
UPC_X_SPI_CLK
To SPI Flash
USBC_XB_D2R_P<2>
USBC_XB_D2R_N<2>
USBC_XB_R2D_CR_P<2>
USBC_XB_R2D_CR_N<2>
USBC_XB_R2D_CR_P<1>
USBC_XB_R2D_CR_N<1>
USBC_XB_D2R_P<1>
USBC_XB_D2R_N<1>
USBC_XB_AUXLSX1
USBC_XB_AUXLSX2
DP_XB_HPD
I2C_TBT_XB_INT_L
TBT_XB_USB2_MXCTL
TBT_XB_USB2_RBIAS
R2853 200
R2834 2.2K
R2835 2.2K
R2827 100K
R2837 2.2K
PU at PCH
THERMDA
TBTTHMSNS_X_D1_P
USE NEAREST GND BALL (AC22) FOR THERM_D_N
BOM_COST_GROUP=TBT
SYNC_MASTER=J132
SYNC_DATE=05/11/2017
PAGE TITLE
USB-C HIGH SPEED 1
Apple Inc.
DRAWING NUMBER 051-02643
SIZE D
REVISION 4.0.0
BRANCH evt-0
PAGE 28 OF 200
SHEET 27 OF 131
NOTICE OF PROPRIETARY PROPERTY:
THE INFORMATION CONTAINED HEREIN IS THE PROPRIETARY PROPERTY OF APPLE INC.
THE POSESSOR AGREES TO THE FOLLOWING:
I TO MAINTAIN THIS DOCUMENT IN CONFIDENCE
II NOT TO REPRODUCE OR COPY IT
III NOT TO REVEAL OR PUBLISH IT IN WHOLE OR PART
IV ALL RIGHTS RESERVED

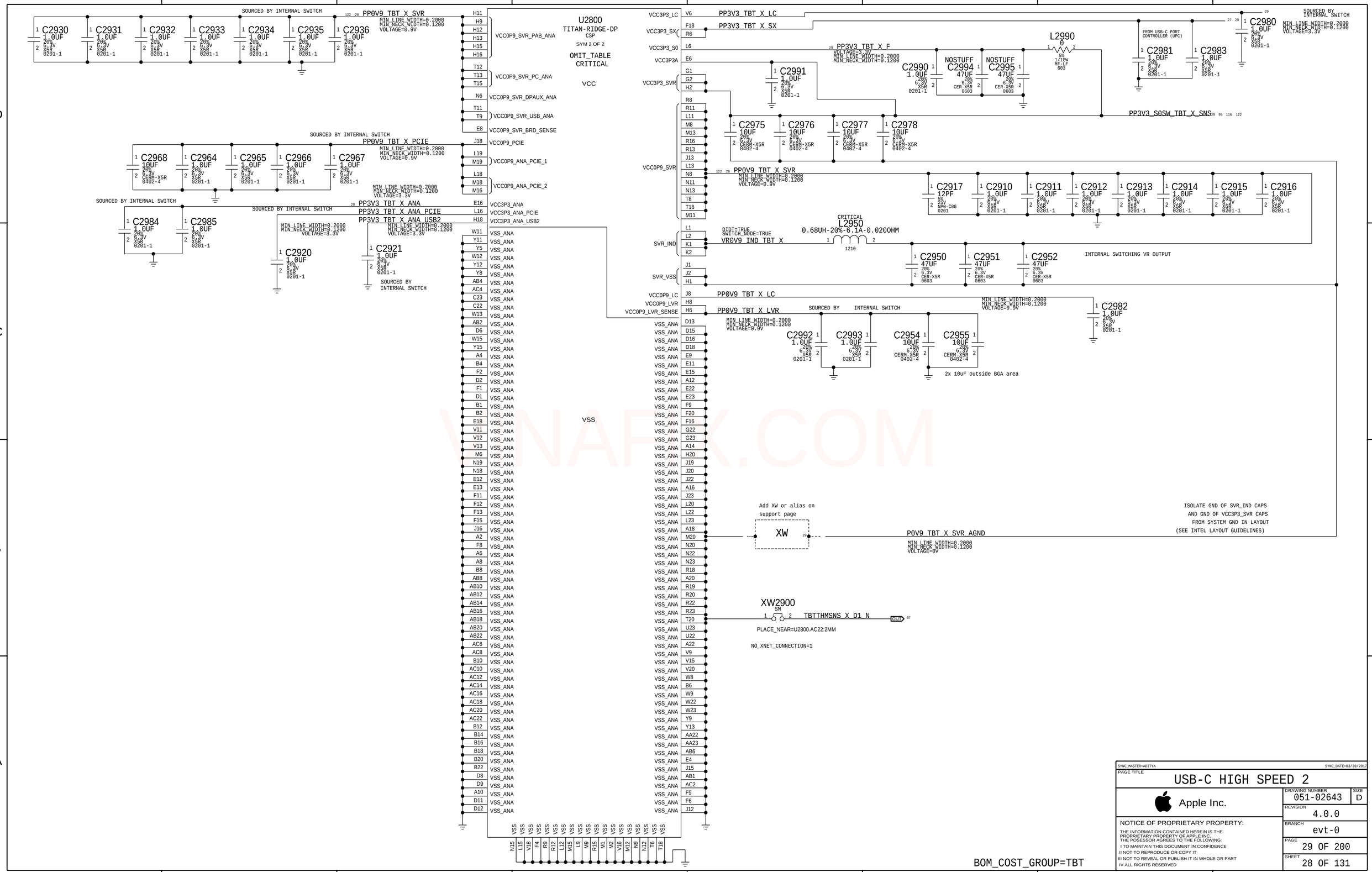
U2800
TITAN-RIDGE-DP
CSP
SYM 2 OF 2
OMIT_TABLE
CRITICAL
VCC
VSS
PP0V9_TBT_X_SVR
PP3V3_TBT_X_PCIE
PP3V3_TBT_X_ANA
PP3V3_TBT_X_ANA_PCIE
PP3V3_TBT_X_ANA_USB2
PP3V3_TBT_X_LC
PP3V3_TBT_X_SX
PP3V3_TBT_X_F
PP3V3_S0SW_TBT_X_SNS
PP0V9_TBT_X_LC
PP0V9_TBT_X_LVR
VR0V9_IND_TBT_X
L2950
0.68UH-20%-6.1A-0.020OHM
L2990
P0V9_TBT_X_SVR_AGND
XW2900
TBTTHMSNS_X_D1_N
PLACE_NEAR=U2800.AC22:2MM
NO_XNET_CONNECTION=1
INTERNAL SWITCHING VR OUTPUT
ISOLATE GND OF SVR_IND CAPS
AND GND OF VCC3P3_SVR CAPS
FROM SYSTEM GND IN LAYOUT
(SEE INTEL LAYOUT GUIDELINES)
2x 10uF outside BGA area
BOM_COST_GROUP=TBT
SYNC_MASTER=ADITYA
SYNC_DATE=03/30/2017
PAGE TITLE
USB-C HIGH SPEED 2
Apple Inc.
DRAWING NUMBER
051-02643
SIZE
D
REVISION
4.0.0
BRANCH
evt-0
PAGE
29 OF 200
SHEET
28 OF 131
NOTICE OF PROPRIETARY PROPERTY:
THE INFORMATION CONTAINED HEREIN IS THE PROPRIETARY PROPERTY OF APPLE INC.
THE POSESSOR AGREES TO THE FOLLOWING:
I TO MAINTAIN THIS DOCUMENT IN CONFIDENCE
II NOT TO REPRODUCE OR COPY IT
III NOT TO REVEAL OR PUBLISH IT IN WHOLE OR PART
IV ALL RIGHTS RESERVED

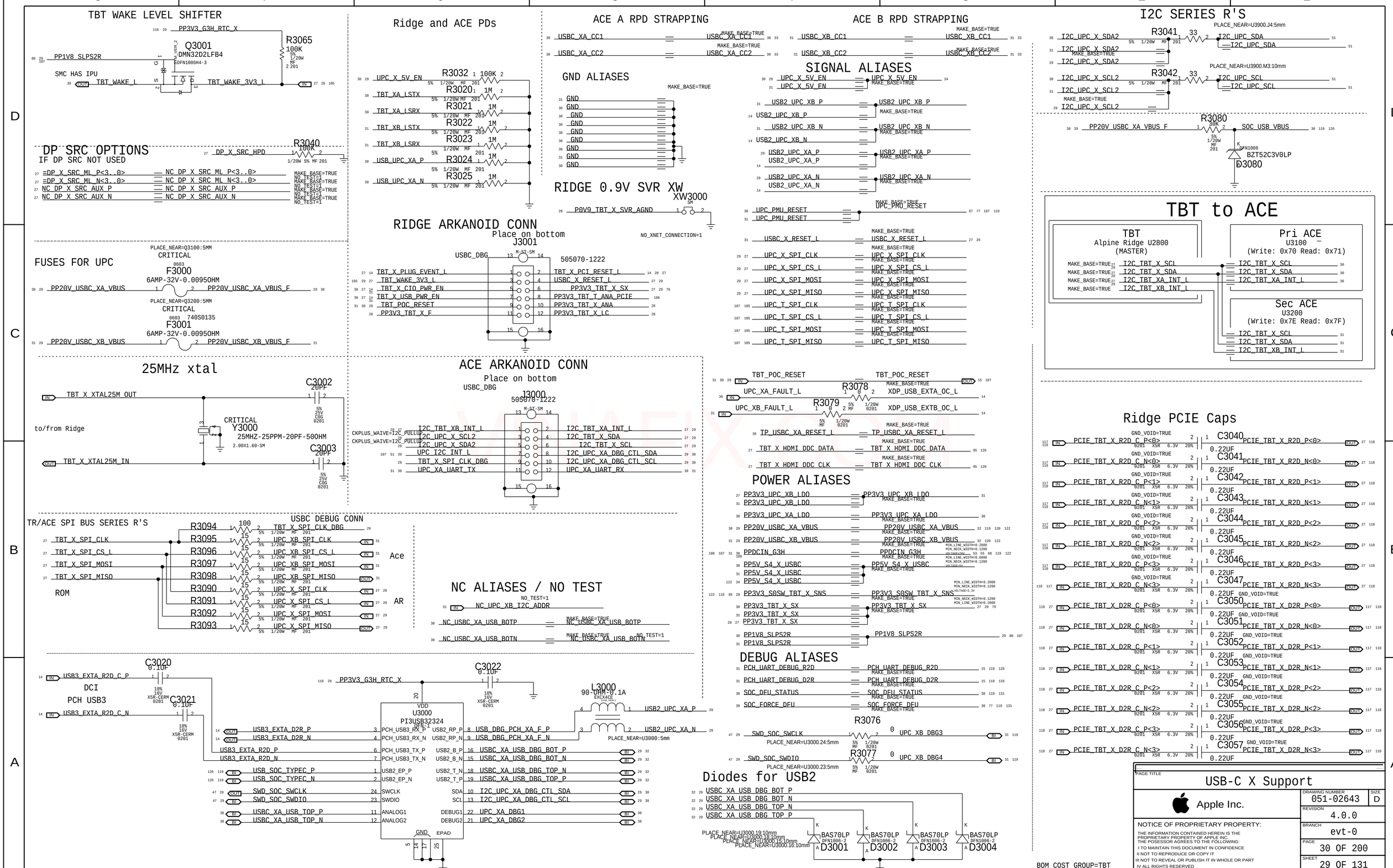
TBT WAKE LEVEL SHIFTER
PP3V3_G3H_RTC_X
R3065
100K
Q3001
DMN32D2LFB4
PP1V8_SLPS2R
SMC HAS IPU
TBT_WAKE_L
TBT_WAKE_3V3_L
Ridge and ACE PDs
R3032 100K
R3020 1M
R3021 1M
R3022 1M
R3023 1M
R3024 1M
R3025 1M
UPC_X_5V_EN
TBT_XA_LSTX
TBT_XA_LSRX
TBT_XB_LSTX
TBT_XB_LSRX
USB_UPC_XA_P
USB_UPC_XA_N
ACE A RPD STRAPPING
USBC_XA_CC1
USBC_XA_CC2
ACE B RPD STRAPPING
USBC_XB_CC1
USBC_XB_CC2
I2C SERIES R'S
R3041 33
R3042 33
I2C_UPC_X_SDA2
I2C_UPC_X_SCL2
I2C_UPC_SDA
I2C_UPC_SCL
PLACE_NEAR=U3900.J4:5mm
PLACE_NEAR=U3900.M3:10mm
DP SRC OPTIONS
IF DP SRC NOT USED
R3040 100K
DP_X_SRC_HPD
DP_X_SRC_ML_P<3..0>
DP_X_SRC_ML_N<3..0>
DP_X_SRC_AUX_P
DP_X_SRC_AUX_N
GND ALIASES
GND
SIGNAL ALIASES
USB2_UPC_XB_P
USB2_UPC_XB_N
USB2_UPC_XA_P
USB2_UPC_XA_N
UPC_PMU_RESET
USBC_X_RESET_L
UPC_X_SPI_CLK
UPC_X_SPI_CS_L
UPC_X_SPI_MOSI
UPC_X_SPI_MISO
UPC_T_SPI_CLK
UPC_T_SPI_CS_L
UPC_T_SPI_MOSI
UPC_T_SPI_MISO
R3080 30K
PP20V_USBC_XA_VBUS_F
SOC_USB_VBUS
D3080 BZT52C3V0LP
TBT to ACE
TBT
Alpine Ridge U2800
(MASTER)
I2C_TBT_X_SCL
I2C_TBT_X_SDA
I2C_TBT_XA_INT_L
I2C_TBT_XB_INT_L
Pri ACE
U3100
(Write: 0x70 Read: 0x71)
Sec ACE
U3200
(Write: 0x7E Read: 0x7F)
FUSES FOR UPC
CRITICAL
F3000
6AMP-32V-0.00950OHM
PP20V_USBC_XA_VBUS
PP20V_USBC_XA_VBUS_F
F3001
PP20V_USBC_XB_VBUS
PP20V_USBC_XB_VBUS_F
RIDGE 0.9V SVR XW
XW3000
P0V9_TBT_X_SVR_AGND
NO_XNET_CONNECTION=1
RIDGE ARKANOID CONN
Place on bottom
J3001
505070-1222
USBC_DBG
TBT_X_PLUG_EVENT_L
TBT_WAKE_3V3_L
TBT_X_CIO_PWR_EN
TBT_X_USB_PWR_EN
TBT_POC_RESET
PP3V3_TBT_X_F
TBT_X_PCI_RESET_L
USBC_X_RESET_L
PP3V3_TBT_X_SX
PP3V3_TBT_X_ANA
PP3V3_TBT_X_LC
25MHz xtal
C3002 20PF
TBT_X_XTAL25M_OUT
to/from Ridge
Y3000
25MHZ-25PPM-20PF-500HM
C3003 20PF
TBT_X_XTAL25M_IN
ACE ARKANOID CONN
Place on bottom
J3000
505070-1222
I2C_TBT_XB_INT_L
I2C_UPC_X_SCL2
I2C_UPC_X_SDA2
UPC_I2C_INT_L
TBT_X_SPI_CLK_DBG
UPC_XA_UART_TX
I2C_TBT_XA_INT_L
I2C_TBT_X_SDA
I2C_TBT_X_SCL
I2C_UPC_XA_DBG_CTL_SDA
I2C_UPC_XA_DBG_CTL_SCL
UPC_XA_UART_RX
TBT_POC_RESET
UPC_XA_FAULT_L
UPC_XB_FAULT_L
R3078 0
R3079 0
XDP_USB_EXTA_OC_L
XDP_USB_EXTB_OC_L
TP_USBC_XA_RESET_L
TBT_X_HDMI_DDC_DATA
TBT_X_HDMI_DDC_CLK
Ridge PCIE Caps
PCIE_TBT_X_R2D_C_P<0>
PCIE_TBT_X_R2D_C_N<0>
PCIE_TBT_X_R2D_C_P<1>
PCIE_TBT_X_R2D_C_N<1>
PCIE_TBT_X_R2D_C_P<2>
PCIE_TBT_X_R2D_C_N<2>
PCIE_TBT_X_R2D_C_P<3>
PCIE_TBT_X_R2D_C_N<3>
PCIE_TBT_X_D2R_C_P<0>
PCIE_TBT_X_D2R_C_N<0>
PCIE_TBT_X_D2R_C_P<1>
PCIE_TBT_X_D2R_C_N<1>
PCIE_TBT_X_D2R_C_P<2>
PCIE_TBT_X_D2R_C_N<2>
PCIE_TBT_X_D2R_C_P<3>
PCIE_TBT_X_D2R_C_N<3>
C3040 0.22UF
C3041 0.22UF
C3042 0.22UF
C3043 0.22UF
C3044 0.22UF
C3045 0.22UF
C3046 0.22UF
C3047 0.22UF
C3050 0.22UF
C3051 0.22UF
C3052 0.22UF
C3053 0.22UF
C3054 0.22UF
C3055 0.22UF
C3056 0.22UF
C3057 0.22UF
TR/ACE SPI BUS SERIES R'S
TBT_X_SPI_CLK
TBT_X_SPI_CS_L
TBT_X_SPI_MOSI
TBT_X_SPI_MISO
ROM
USBC DEBUG CONN
R3094 100
R3095 15
R3096 15
R3097 15
R3098 15
R3090 15
R3091 15
R3092 15
R3093 15
TBT_X_SPI_CLK_DBG
UPC_XB_SPI_CLK
UPC_XB_SPI_CS_L
UPC_XB_SPI_MOSI
UPC_XB_SPI_MISO
UPC_X_SPI_CLK
UPC_X_SPI_CS_L
UPC_X_SPI_MOSI
UPC_X_SPI_MISO
Ace
AR
NC ALIASES / NO TEST
NC_UPC_XB_I2C_ADDR
NC_USBC_XA_USB_BOTP
NC_USBC_XA_USB_BOTN
POWER ALIASES
PP3V3_UPC_XB_LDO
PP3V3_UPC_XA_LDO
PP20V_USBC_XA_VBUS
PP20V_USBC_XB_VBUS
PPDCIN_G3H
PP5V_S4_X_USBC
PP5V_S4_X_USBC
PP5V_S4_X_USBC
PP3V3_S0SW_TBT_X_SNS
PP3V3_TBT_X_SX
PP3V3_TBT_X_SX
PP3V3_TBT_X_SX
PP1V8_SLPS2R
PP1V8_SLPS2R
DEBUG ALIASES
PCH_UART_DEBUG_R2D
PCH_UART_DEBUG_D2R
SOC_DFU_STATUS
SOC_FORCE_DFU
R3076 0
SWD_SOC_SWCLK
UPC_XB_DBG3
R3077 0
SWD_SOC_SWDIO
UPC_XB_DBG4
DCI
PCH USB3
USB3_EXTA_R2D_C_P
USB3_EXTA_R2D_C_N
C3020 0.1UF
C3021 0.1UF
C3022 0.1UF
PP3V3_G3H_RTC_X
U3000
PI3USB32324
L3000 90-OHM-0.1A
USB2_UPC_XA_P
USB2_UPC_XA_N
USB3_EXTA_D2R_P
USB3_EXTA_D2R_N
USB3_EXTA_R2D_P
USB3_EXTA_R2D_N
USB_SOC_TYPEC_P
USB_SOC_TYPEC_N
SWD_SOC_SWCLK
SWD_SOC_SWDIO
USBC_XA_USB_TOP_P
USBC_XA_USB_TOP_N
USB_DBG_PCH_XA_F_P
USB_DBG_PCH_XA_F_N
USBC_XA_USB_DBG_BOT_P
USBC_XA_USB_DBG_BOT_N
USBC_XA_USB_DBG_TOP_N
USBC_XA_USB_DBG_TOP_P
I2C_UPC_XA_DBG_CTL_SDA
I2C_UPC_XA_DBG_CTL_SCL
UPC_XA_DBG1
UPC_XA_DBG2
Diodes for USB2
USBC_XA_USB_DBG_BOT_P
USBC_XA_USB_DBG_BOT_N
USBC_XA_USB_DBG_TOP_N
USBC_XA_USB_DBG_TOP_P
D3001 BAS70LP
D3002 BAS70LP
D3003 BAS70LP
D3004 BAS70LP
BOM_COST_GROUP=TBT
PAGE TITLE
USB-C X Support
Apple Inc.
DRAWING NUMBER 051-02643
SIZE D
REVISION 4.0.0
BRANCH evt-0
PAGE 30 OF 200
SHEET 29 OF 131
NOTICE OF PROPRIETARY PROPERTY:
THE INFORMATION CONTAINED HEREIN IS THE PROPRIETARY PROPERTY OF APPLE INC.
THE POSESSOR AGREES TO THE FOLLOWING:
I TO MAINTAIN THIS DOCUMENT IN CONFIDENCE
II NOT TO REPRODUCE OR COPY IT
III NOT TO REVEAL OR PUBLISH IT IN WHOLE OR PART
IV ALL RIGHTS RESERVED

PRIMARY ACE USB-C PORT CONTROLLER (UPC)

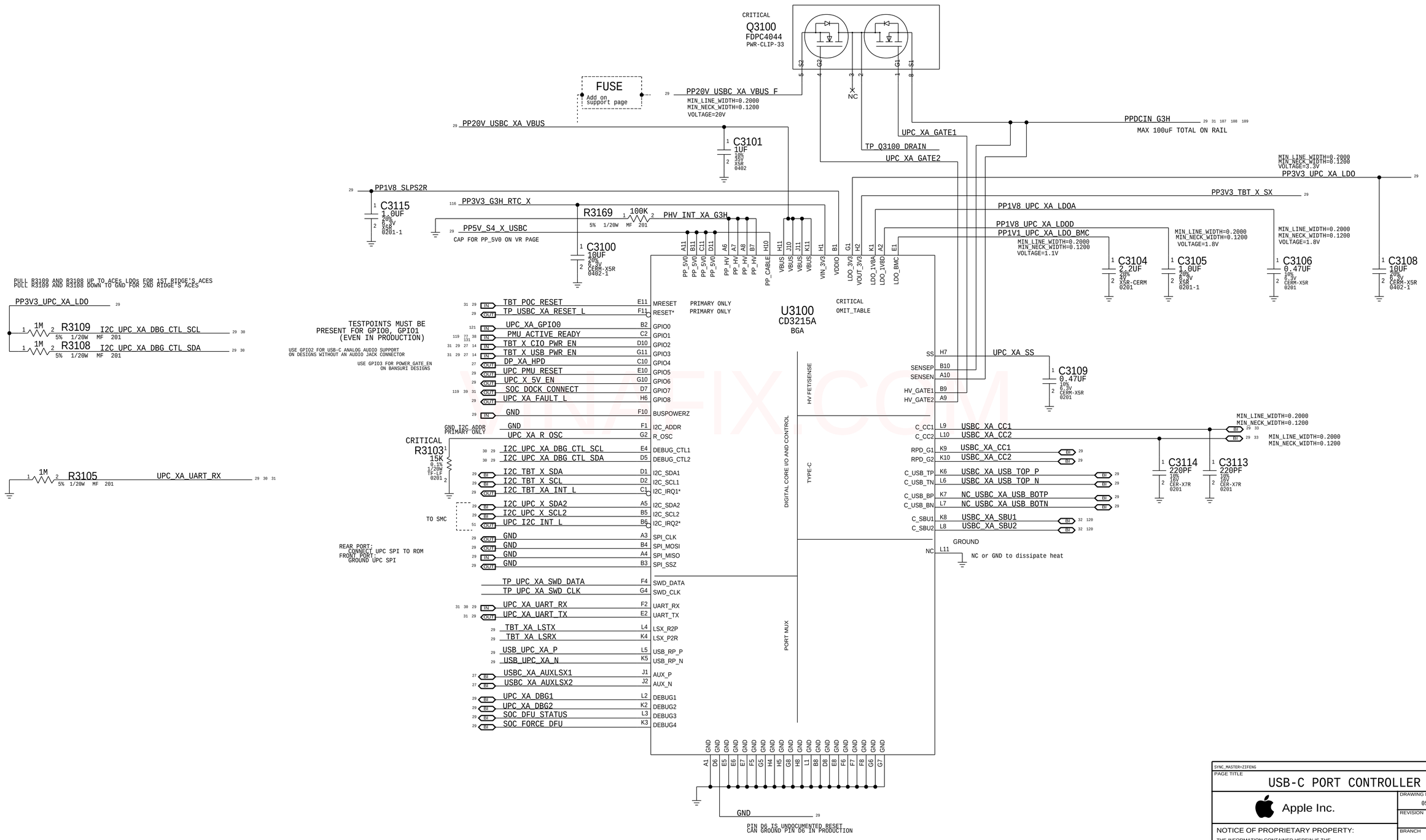

BOM_COST_GROUP=USB-C

SYNC_MASTER=ZIFENG SYNC_DATE=05/26/2017

PAGE TITLE: USB-C PORT CONTROLLER A

Apple Inc.

DRAWING NUMBER	051-02643
SIZE	D
REVISION	4.0.0
BRANCH	evt-0
PAGE	31 OF 200
SHEET	30 OF 131

NOTICE OF PROPRIETARY PROPERTY:
THE INFORMATION CONTAINED HEREIN IS THE PROPRIETARY PROPERTY OF APPLE INC.
THE POSESSOR AGREES TO THE FOLLOWING:
I TO MAINTAIN THIS DOCUMENT IN CONFIDENCE
II NOT TO REPRODUCE OR COPY IT
III NOT TO REVEAL OR PUBLISH IT IN WHOLE OR PART
IV ALL RIGHTS RESERVED

SECONDARY ACE USB-C PORT CONTROLLER (UPC)

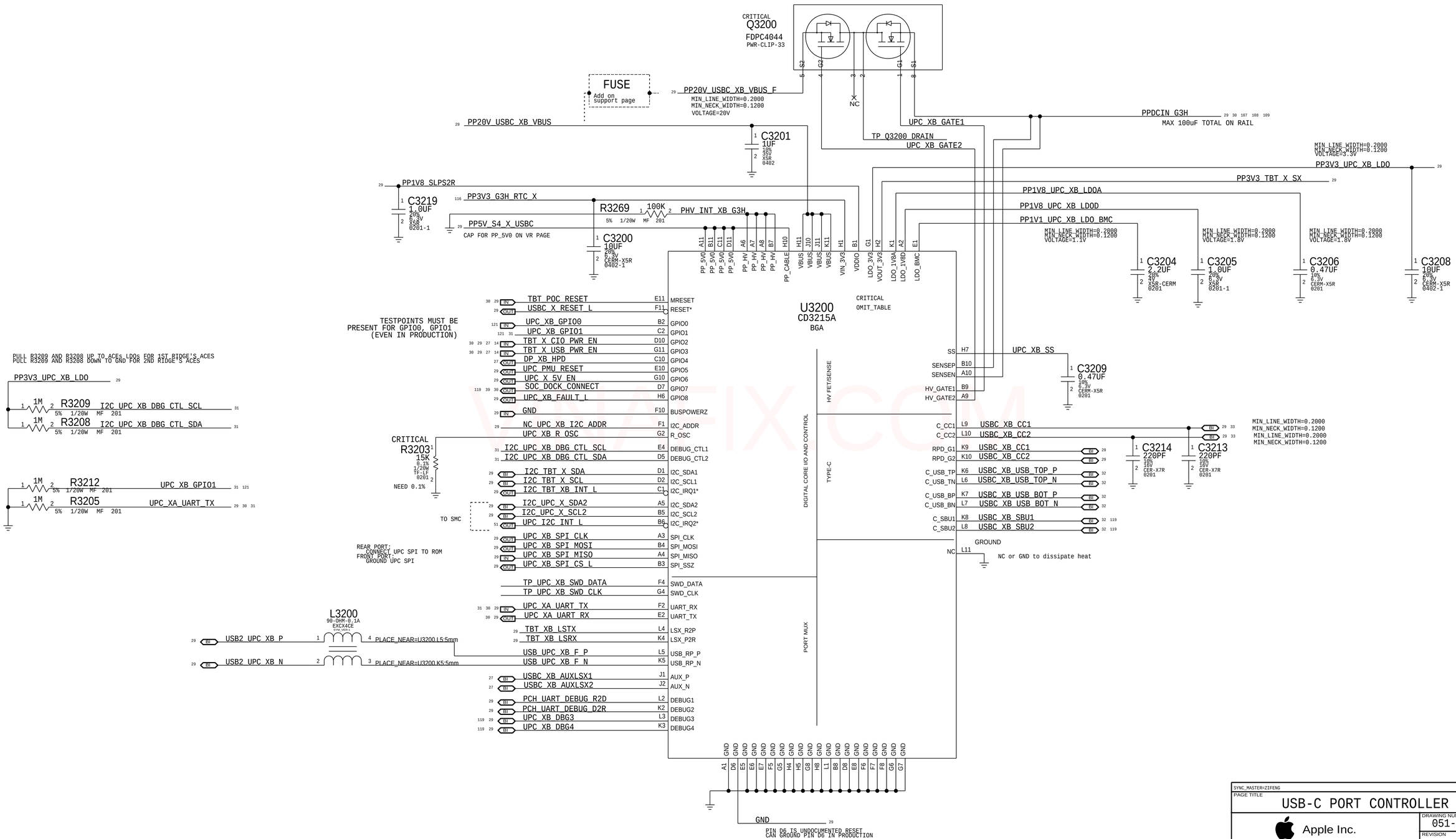

BOM_COST_GROUP=USB-C

SYNC_MASTER=ZIFENG SYNC_DATE=05/26/2017

PAGE TITLE
USB-C PORT CONTROLLER B

Apple Inc.

DRAWING NUMBER 051-02643 SIZE D
REVISION 4.0.0
BRANCH evt-0
PAGE 32 OF 200
SHEET 31 OF 131

NOTICE OF PROPRIETARY PROPERTY:
THE INFORMATION CONTAINED HEREIN IS THE PROPRIETARY PROPERTY OF APPLE INC.
THE POSESSOR AGREES TO THE FOLLOWING:
I TO MAINTAIN THIS DOCUMENT IN CONFIDENCE
II NOT TO REPRODUCE OR COPY IT
III NOT TO REVEAL OR PUBLISH IT IN WHOLE OR PART
IV ALL RIGHTS RESERVED

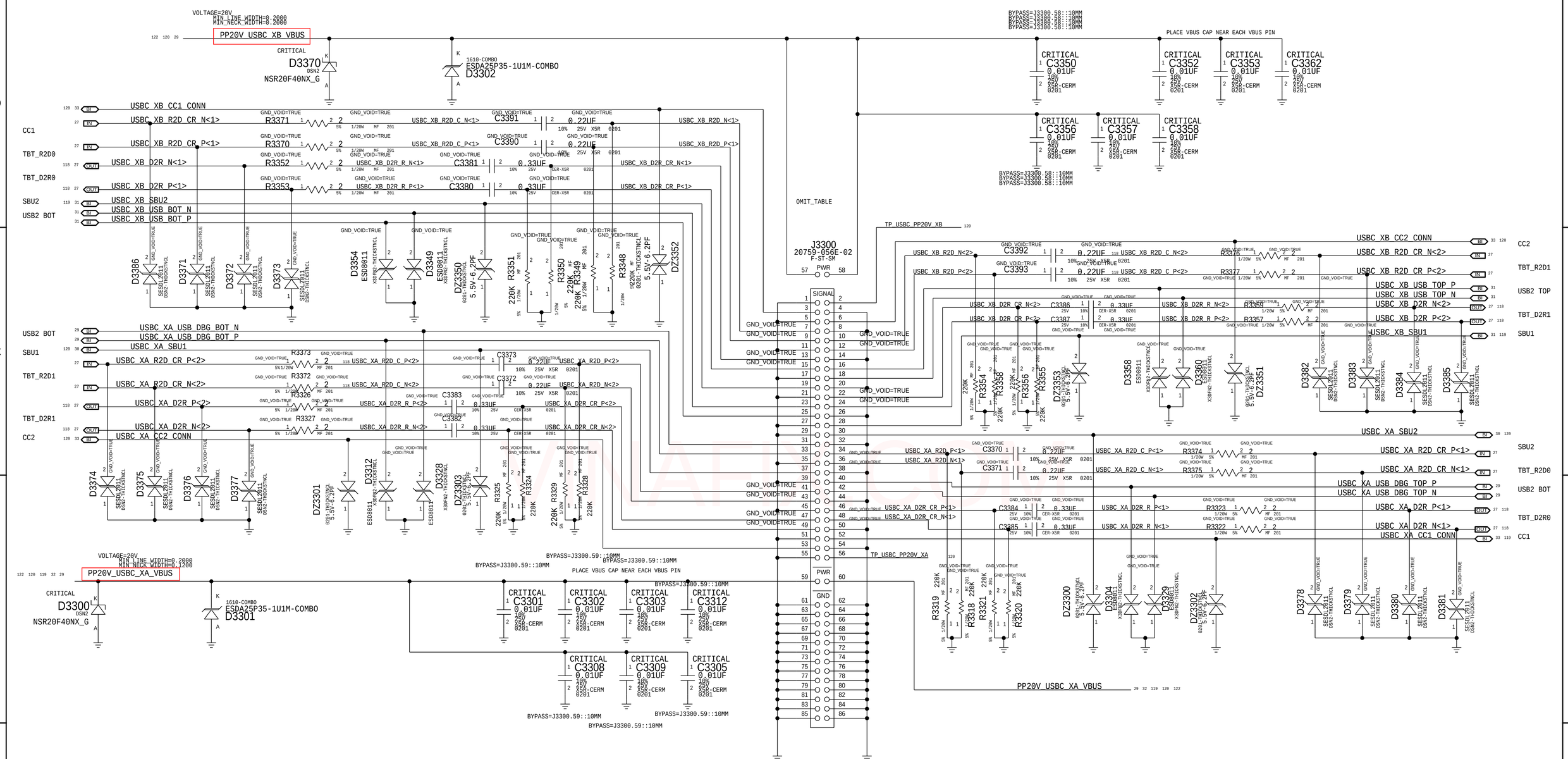

LAST CHANGE: Wed Apr 1 22:57:37 2015

PAGE TITLE
USB-C CONNECTOR A

Apple Inc.

DRAWING NUMBER 051-02643 SIZE D
REVISION 4.0.0
BRANCH evt-0
PAGE 33 OF 200
SHEET 32 OF 131

NOTICE OF PROPRIETARY PROPERTY:
THE INFORMATION CONTAINED HEREIN IS THE PROPRIETARY PROPERTY OF APPLE INC.
THE POSESSOR AGREES TO THE FOLLOWING:
I TO MAINTAIN THIS DOCUMENT IN CONFIDENCE
II NOT TO REPRODUCE OR COPY IT
III NOT TO REVEAL OR PUBLISH IT IN WHOLE OR PART
IV ALL RIGHTS RESERVED

XA CC Protection

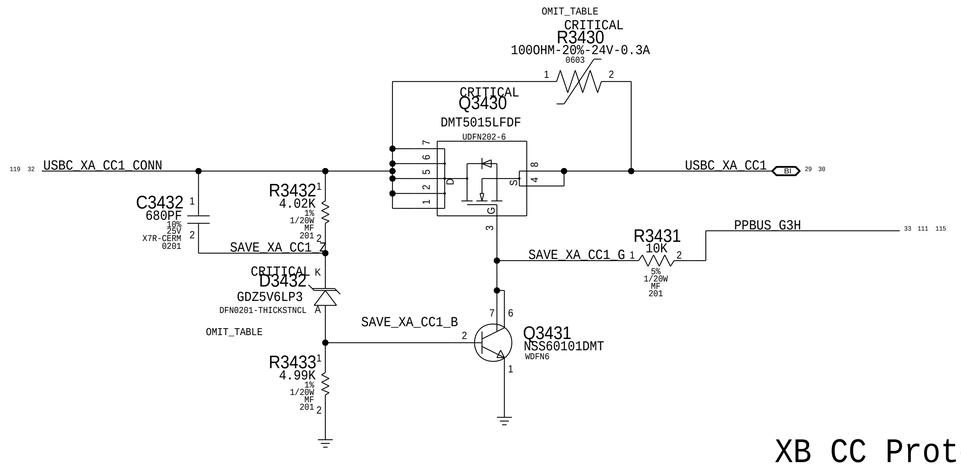

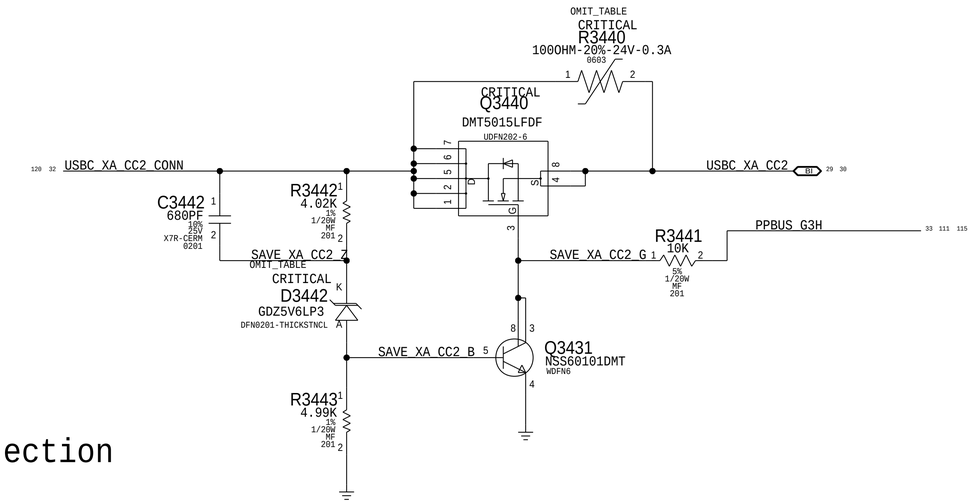

XB CC Protection

VINAFIX.COM

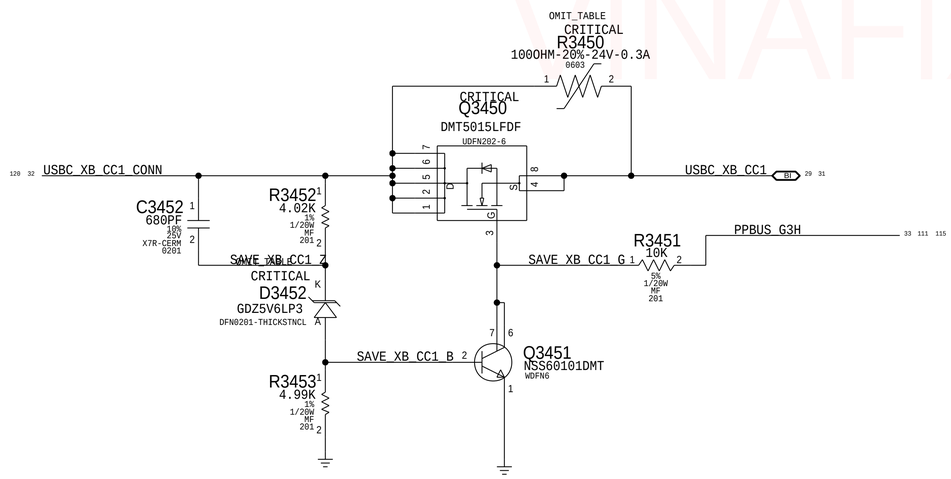

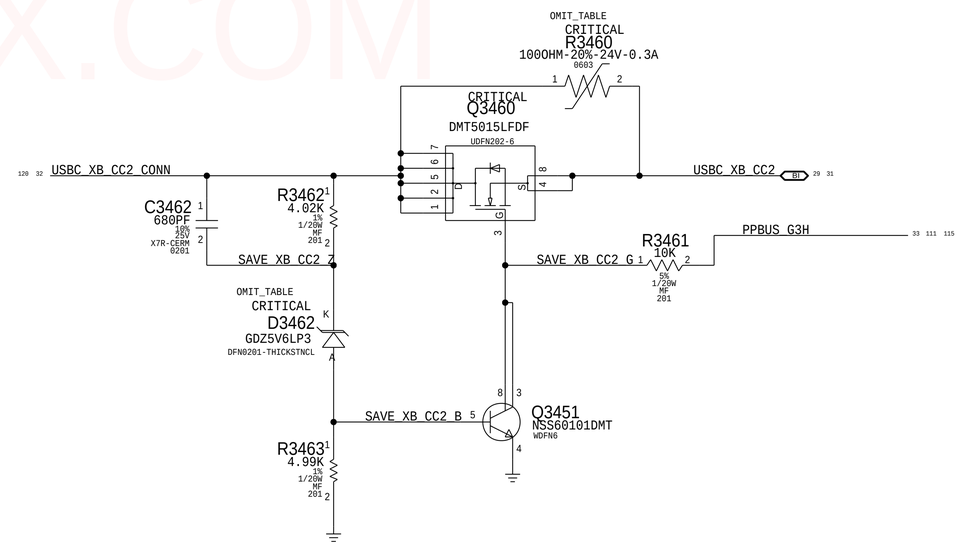

PART NUMBER	QTY	DESCRIPTION	REFERENCE DES	CRITICAL	BOM OPTION
371S00181	4	DIODE,ZENER,5.6V,250MW,DFN0201	D3432,D3442,D3452,D3462	CRITICAL	
740S00050	4	FUSE,THRMSTR,PTC,470OHM,24V,60MA,0603	R3430,R3440,R3450,R3460	CRITICAL	

BOM_COST_GROUP=USB-C

DESIGN: X1032/MLB_P4BP
LAST CHANGE: Fri Jan 6 16:01:21 2017

PAGE TITLE
USBC X Connector Support

Apple Inc.

DRAWING NUMBER 051-02643
SIZE D
REVISION 4.0.0
BRANCH evt-0
PAGE 34 OF 200
SHEET 33 OF 131

NOTICE OF PROPRIETARY PROPERTY:
THE INFORMATION CONTAINED HEREIN IS THE PROPRIETARY PROPERTY OF APPLE INC.
THE POSESSOR AGREES TO THE FOLLOWING:
I TO MAINTAIN THIS DOCUMENT IN CONFIDENCE
II NOT TO REPRODUCE OR COPY IT
III NOT TO REVEAL OR PUBLISH IT IN WHOLE OR PART
IV ALL RIGHTS RESERVED

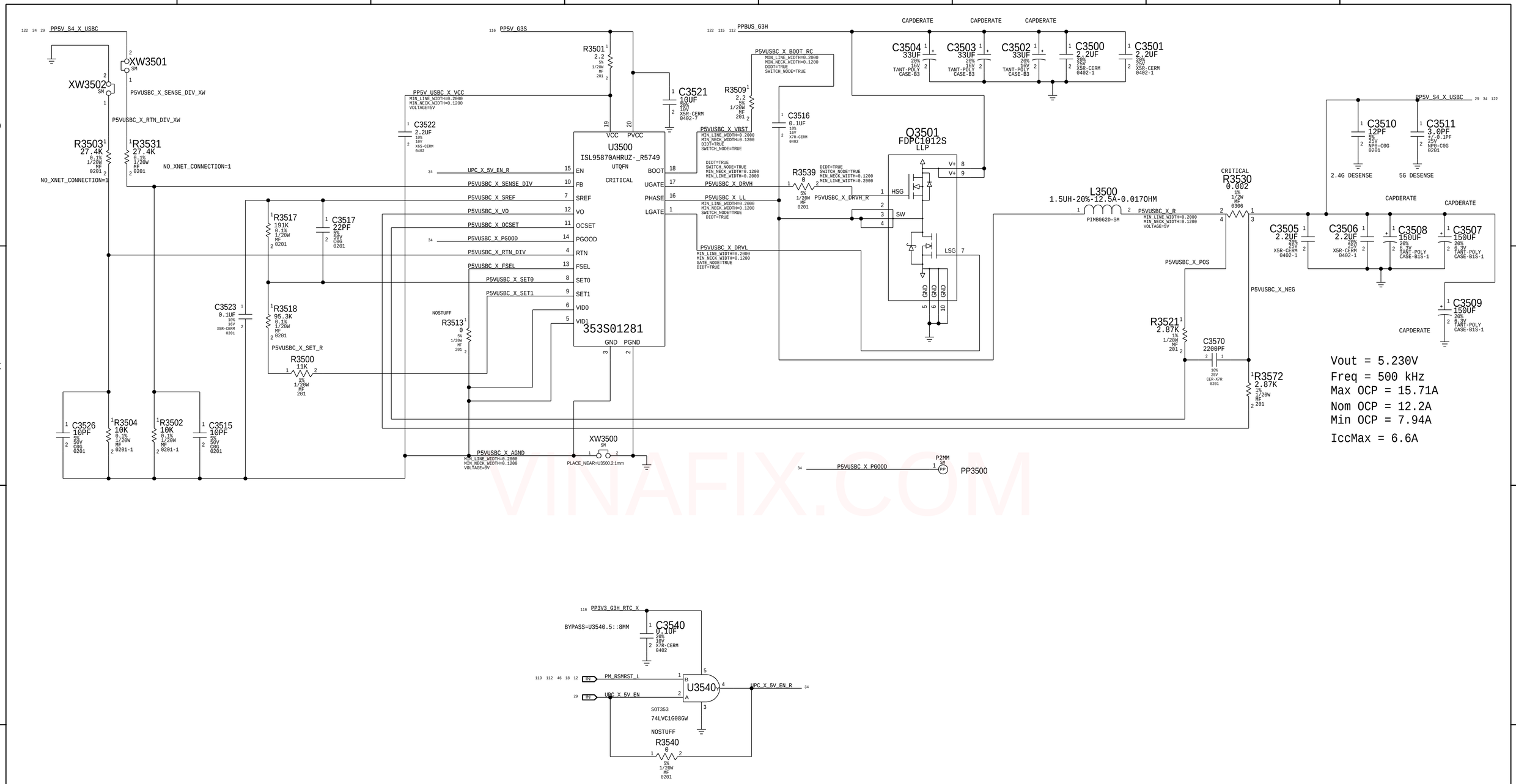

BOM_COST_GROUP=USB-C

PAGE TITLE	TBT 5V REGULATOR
Apple Inc.	DRAWING NUMBER 051-02643 · SIZE D
	REVISION 4.0.0
NOTICE OF PROPRIETARY PROPERTY: THE INFORMATION CONTAINED HEREIN IS THE PROPRIETARY PROPERTY OF APPLE INC. THE POSESSOR AGREES TO THE FOLLOWING: I TO MAINTAIN THIS DOCUMENT IN CONFIDENCE II NOT TO REPRODUCE OR COPY IT III NOT TO REVEAL OR PUBLISH IT IN WHOLE OR PART IV ALL RIGHTS RESERVED	BRANCH evt-0
	PAGE 35 OF 200
	SHEET 34 OF 131

VINAFIX.COM

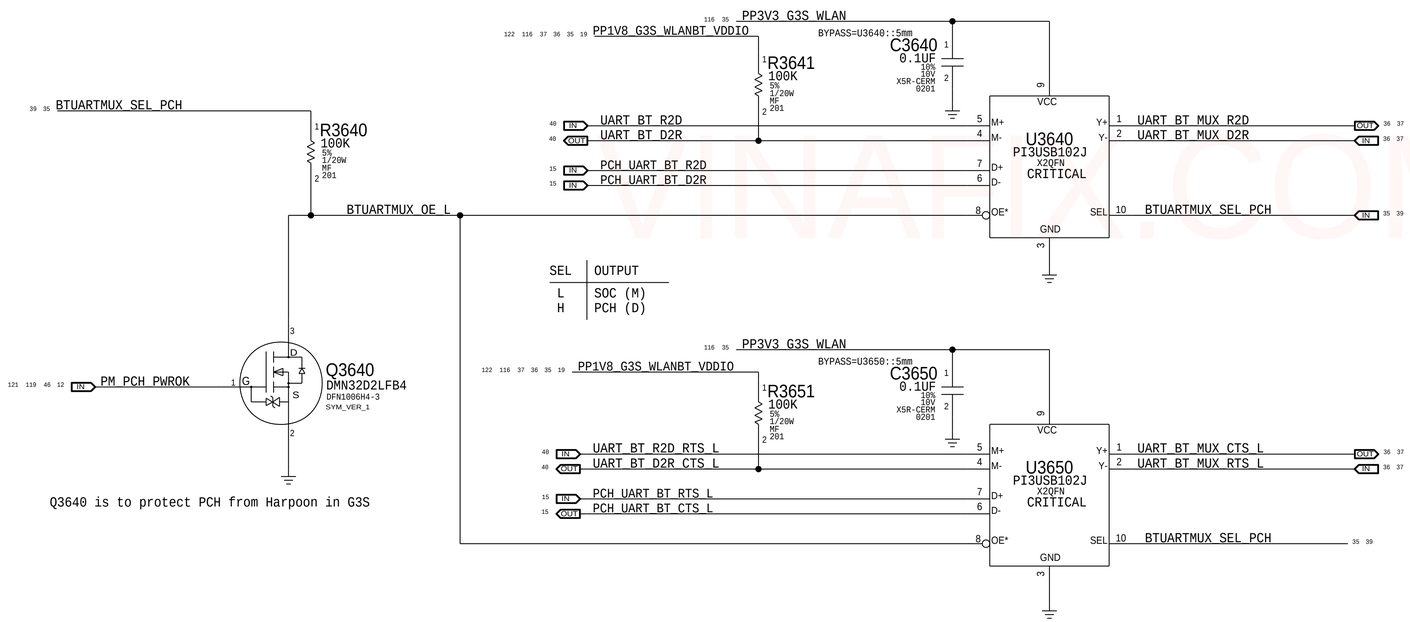

BOM_COST_GROUP=WIRELESS

SYNC_MASTER=J132 SYNC_DATE=03/29/2017

PAGE TITLE

WIFI/BT: Support

Apple Inc.

DRAWING NUMBER 051-02643 SIZE D

REVISION 4.0.0

BRANCH evt-0

PAGE 36 OF 200

SHEET 35 OF 131

NOTICE OF PROPRIETARY PROPERTY:

THE INFORMATION CONTAINED HEREIN IS THE PROPRIETARY PROPERTY OF APPLE INC.
THE POSESSOR AGREES TO THE FOLLOWING:

I TO MAINTAIN THIS DOCUMENT IN CONFIDENCE
II NOT TO REPRODUCE OR COPY IT
III NOT TO REVEAL OR PUBLISH IT IN WHOLE OR PART
IV ALL RIGHTS RESERVED

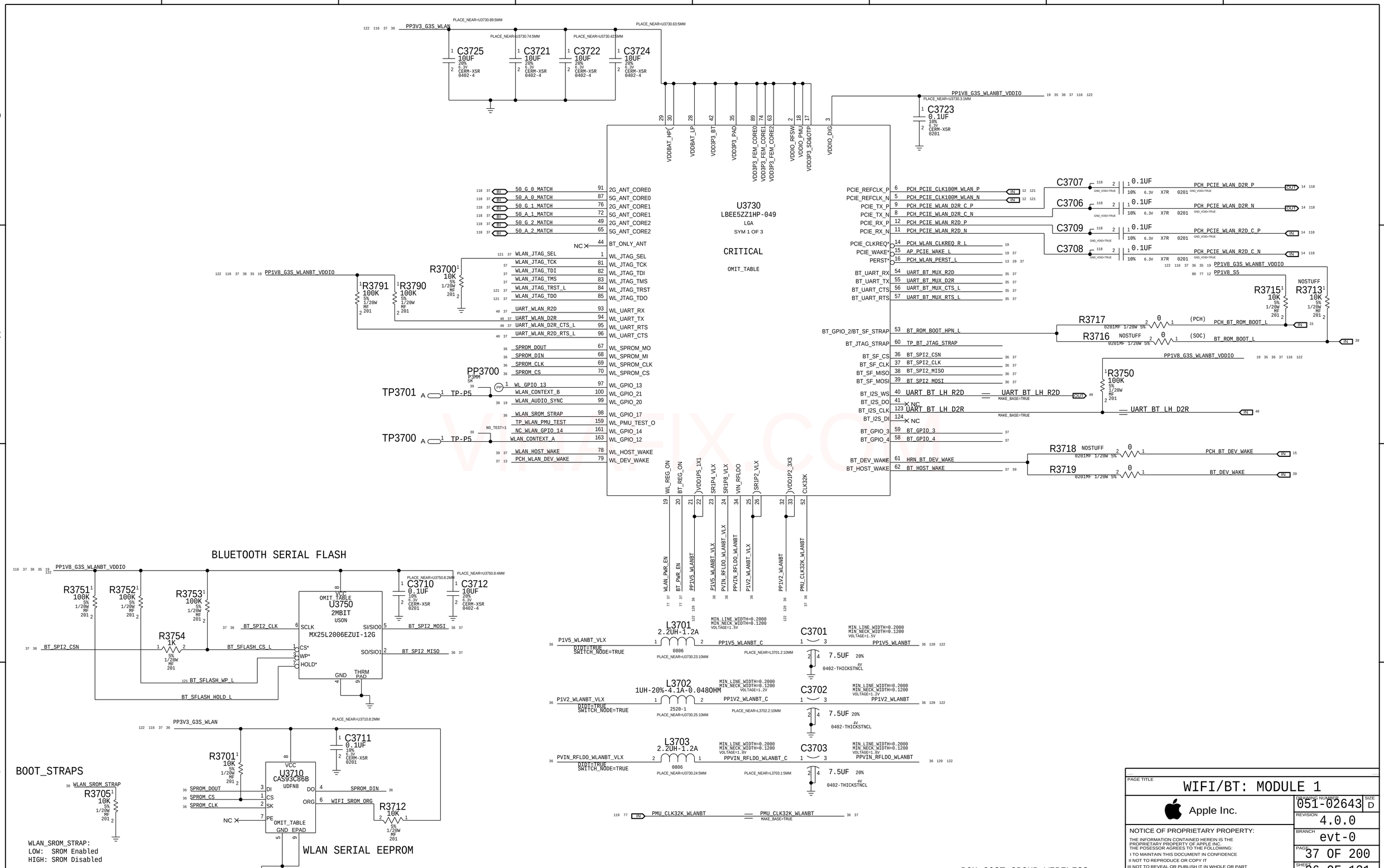
PP3V3_G3S_WLAN
C3725 10UF 20% 6.3V CERM-X5R 0402-4
C3721 10UF 20% 6.3V CERM-X5R 0402-4
C3722 10UF 20% 6.3V CERM-X5R 0402-4
C3724 10UF 20% 6.3V CERM-X5R 0402-4
PP1V8_G3S_WLANBT_VDDIO
C3723 0.1UF 10% 6.3V CERM-X5R 0201
U3730
LBEE5ZZ1HP-049
LGA
SYM 1 OF 3
CRITICAL
OMIT_TABLE
50_G_0_MATCH
50_A_0_MATCH
50_G_1_MATCH
50_A_1_MATCH
50_G_2_MATCH
50_A_2_MATCH
WLAN_JTAG_SEL
WLAN_JTAG_TCK
WLAN_JTAG_TDI
WLAN_JTAG_TMS
WLAN_JTAG_TRST_L
WLAN_JTAG_TDO
UART_WLAN_R2D
UART_WLAN_D2R
UART_WLAN_D2R_CTS_L
UART_WLAN_R2D_RTS_L
SPROM_DOUT
SPROM_DIN
SPROM_CLK
SPROM_CS
WL_GPIO_13
WLAN_CONTEXT_B
WLAN_AUDIO_SYNC
WLAN_SROM_STRAP
TP_WLAN_PMU_TEST
NC_WLAN_GPIO_14
WLAN_CONTEXT_A
WLAN_HOST_WAKE
PCH_WLAN_DEV_WAKE
PCIE_REFCLK_P
PCIE_REFCLK_N
PCIE_TX_P
PCIE_TX_N
PCIE_RX_P
PCIE_RX_N
PCIE_CLKREQ*
PCIE_WAKE*
PERST*
BT_UART_RX
BT_UART_TX
BT_UART_CTS
BT_UART_RTS
BT_GPIO_2/BT_SF_STRAP
BT_JTAG_STRAP
BT_SF_CS
BT_SF_CLK
BT_SF_MISO
BT_SF_MOSI
BT_I2S_WS
BT_I2S_DO
BT_I2S_CLK
BT_I2S_DI
BT_GPIO_3
BT_GPIO_4
BT_DEV_WAKE
BT_HOST_WAKE
PCH_PCIE_CLK100M_WLAN_P
PCH_PCIE_CLK100M_WLAN_N
PCH_PCIE_WLAN_D2R_C_P
PCH_PCIE_WLAN_D2R_C_N
PCH_PCIE_WLAN_R2D_P
PCH_PCIE_WLAN_R2D_N
PCH_WLAN_CLKREQ_R_L
AP_PCIE_WAKE_L
PCH_WLAN_PERST_L
UART_BT_MUX_R2D
UART_BT_MUX_D2R
UART_BT_MUX_CTS_L
UART_BT_MUX_RTS_L
TP_BT_JTAG_STRAP
BT_SPI2_CSN
BT_SPI2_CLK
BT_SPI2_MISO
BT_SPI2_MOSI
UART_BT_LH_R2D
UART_BT_LH_D2R
HRN_BT_DEV_WAKE
BT_HOST_WAKE
BT_GPIO_3
BT_GPIO_4
C3707 0.1UF
C3706 0.1UF
C3709 0.1UF
C3708 0.1UF
PCH_PCIE_WLAN_D2R_P
PCH_PCIE_WLAN_D2R_N
PCH_PCIE_WLAN_R2D_C_P
PCH_PCIE_WLAN_R2D_C_N
PP1V8_G3S_WLANBT_VDDIO
PP1V8_S5
R3791 100K
R3790 100K
R3700 10K
R3715 10K
R3713 10K NOSTUFF
R3717 0 (PCH)
R3716 NOSTUFF 0 (SOC)
PCH_BT_ROM_BOOT_L
BT_ROM_BOOT_L
R3750 100K
R3718 NOSTUFF 0
R3719 0
PCH_BT_DEV_WAKE
BT_DEV_WAKE
PP3700
TP3701
TP3700
TP-P5
WL_REG_ON
BT_REG_ON
VDDIP5_1X1
SRIP4_VLX
SRIP8_VLX
VIN_RFLDO
SRIP2_VLX
VDDIP2_3X3
CLK32K
WLAN_PWR_EN
BT_PWR_EN
PP1V5_WLANBT
P1V5_WLANBT_VLX
PVIN_RFLDO_WLANBT_VLX
PPVIN_RFLDO_WLANBT
P1V2_WLANBT_VLX
PP1V2_WLANBT
PMU_CLK32K_WLANBT
BLUETOOTH SERIAL FLASH
PP1V8_G3S_WLANBT_VDDIO
R3751 100K
R3752 100K
R3753 100K
R3754 1K
C3710 0.1UF
C3712 10UF 20% 6.3V CERM-X5R 0402-4
U3750
2MBIT
USON
MX25L2006EZUI-12G
OMIT_TABLE
BT_SPI2_CLK
BT_SPI2_CSN
BT_SPI2_MOSI
BT_SPI2_MISO
BT_SFLASH_CS_L
BT_SFLASH_WP_L
BT_SFLASH_HOLD_L
PP3V3_G3S_WLAN
C3711 0.1UF
R3701 10K
U3710
CAS93C86B
UDFN8
SPROM_DOUT
SPROM_CS
SPROM_CLK
SPROM_DIN
WIFI_SROM_ORG
R3712 10K
BOOT_STRAPS
WLAN_SROM_STRAP
R3705 10K
WLAN_SROM_STRAP:
LOW: SROM Enabled
HIGH: SROM Disabled
WLAN SERIAL EEPROM
L3701 2.2UH-1.2A
P1V5_WLANBT_VLX
PP1V5_WLANBT_C
PP1V5_WLANBT
C3701 7.5UF 20% 0402-THICKSTNCL
L3702 1UH-20%-4.1A-0.048OHM
P1V2_WLANBT_VLX
PP1V2_WLANBT_C
PP1V2_WLANBT
C3702 7.5UF 20% 0402-THICKSTNCL
L3703 2.2UH-1.2A
PVIN_RFLDO_WLANBT_VLX
PPVIN_RFLDO_WLANBT_C
PPVIN_RFLDO_WLANBT
C3703 7.5UF 20% 0402-THICKSTNCL
PMU_CLK32K_WLANBT
BOM_COST_GROUP=WIRELESS
PAGE TITLE
WIFI/BT: MODULE 1
Apple Inc.
DRAWING NUMBER 051-02643
SIZE D
REVISION 4.0.0
BRANCH evt-0
PAGE 37 OF 200
SHEET 36 OF 131
NOTICE OF PROPRIETARY PROPERTY:
THE INFORMATION CONTAINED HEREIN IS THE PROPRIETARY PROPERTY OF APPLE INC.
THE POSESSOR AGREES TO THE FOLLOWING:
I TO MAINTAIN THIS DOCUMENT IN CONFIDENCE
II NOT TO REPRODUCE OR COPY IT
III NOT TO REVEAL OR PUBLISH IT IN WHOLE OR PART
IV ALL RIGHTS RESERVED

PART NUMBER	QTY	DESCRIPTION	REFERENCE DES	CRITICAL	BOM OPTION
155S00196	2	FILTER,DIPLEXER,LB/HB,LGA6	U3810,U3830	CRITICAL	RF_TUNING

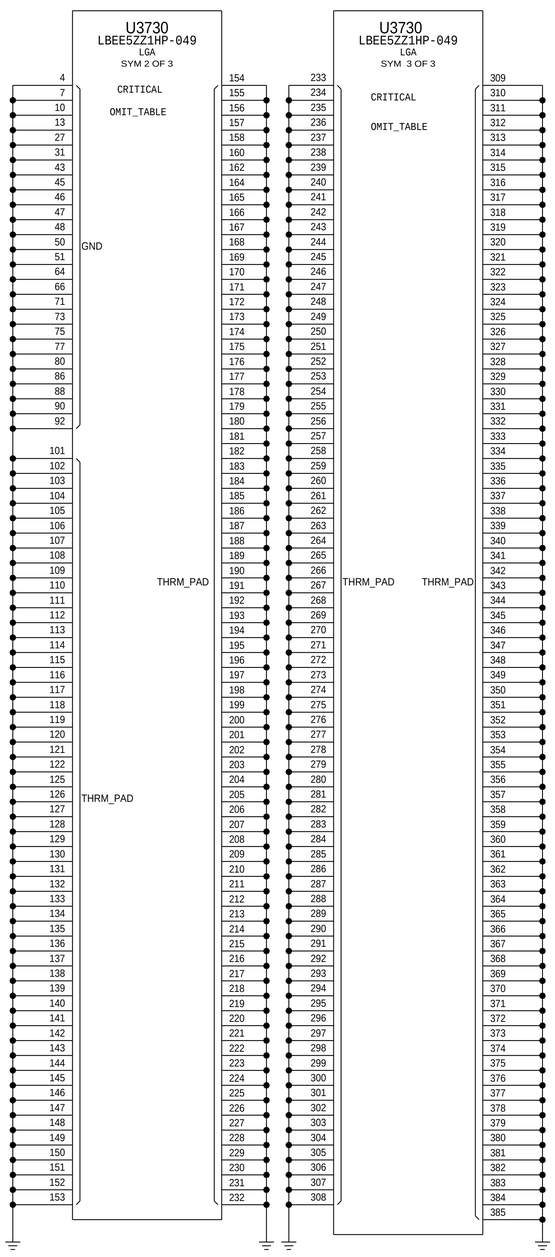

DEBUG CONNECTOR

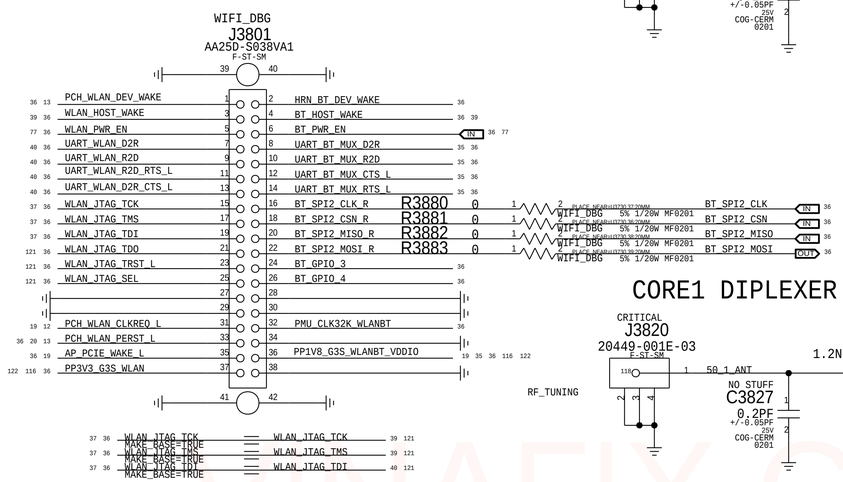

ACCELERATION SENSOR

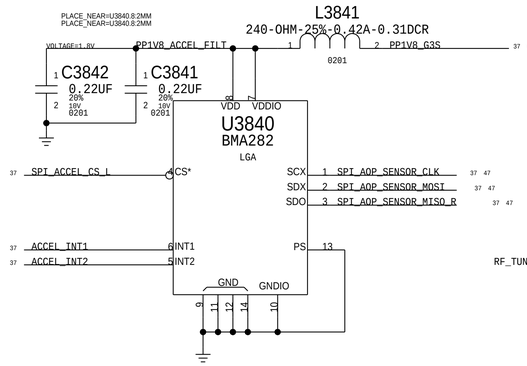

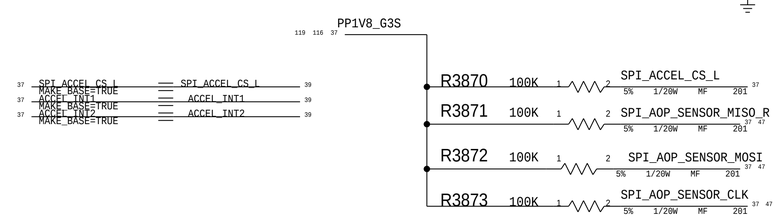

CORE0 DIPLEXER AND MATCHING NETWORK

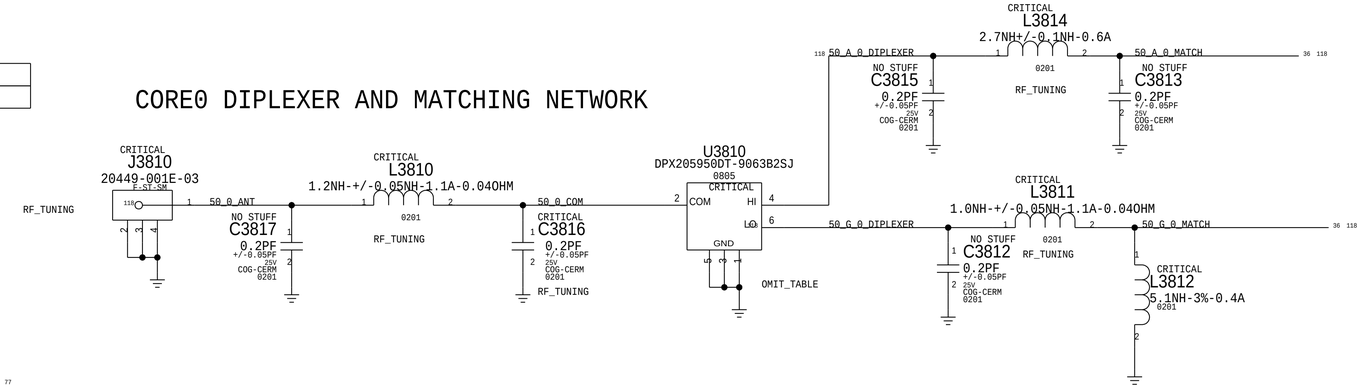

CORE1 DIPLEXER AND MATCHING NETWORK

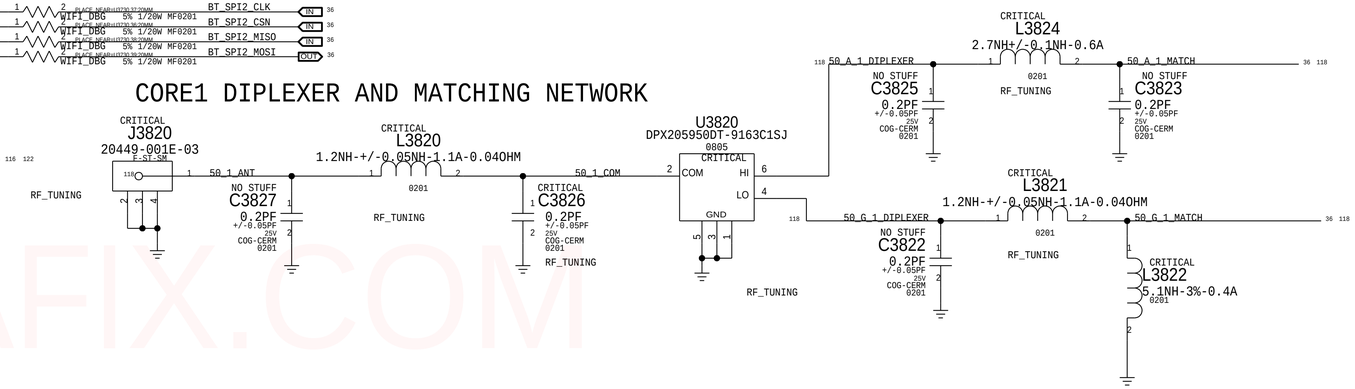

CORE2/Aux DIPLEXER AND MATCHING NETWORK

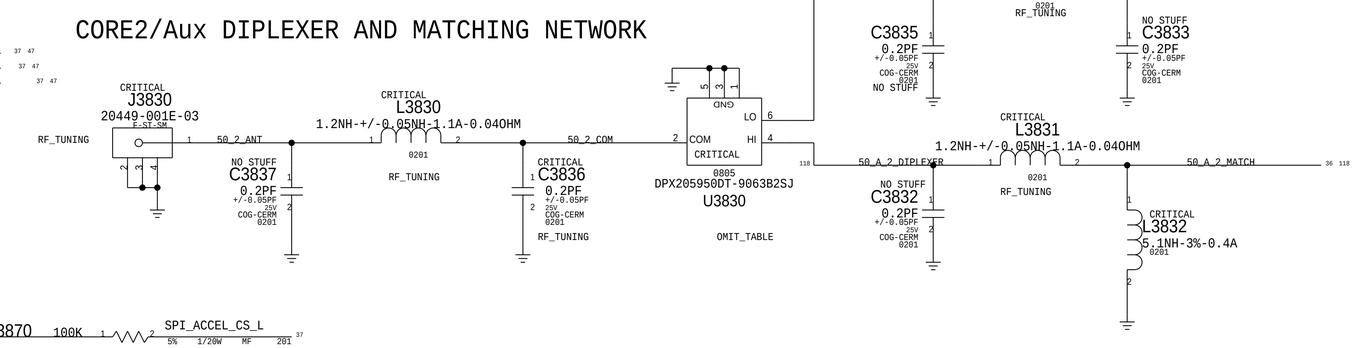

BOM_COST_GROUP=WIRELESS

PAGE TITLE: AP & BT Conn

Apple Inc.

DRAWING NUMBER: 051-02643 SIZE: D

REVISION: 4.0.0

BRANCH: evt-0

PAGE: 38 OF 200

SHEET: 37 OF 131

NOTICE OF PROPRIETARY PROPERTY:
THE INFORMATION CONTAINED HEREIN IS THE PROPRIETARY PROPERTY OF APPLE INC.
THE POSESSOR AGREES TO THE FOLLOWING:
I TO MAINTAIN THIS DOCUMENT IN CONFIDENCE
II NOT TO REPRODUCE OR COPY IT
III NOT TO REVEAL OR PUBLISH IT IN WHOLE OR PART
IV ALL RIGHTS RESERVED

VINAFIX.COM

Note 1) IPU represents SW configured state, not HW default

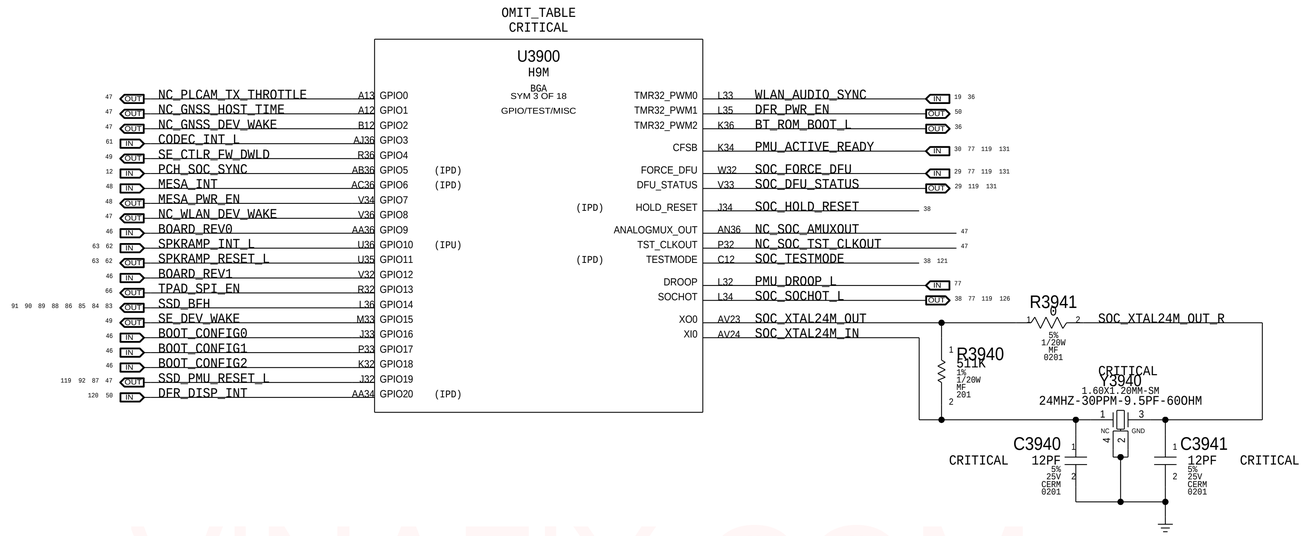

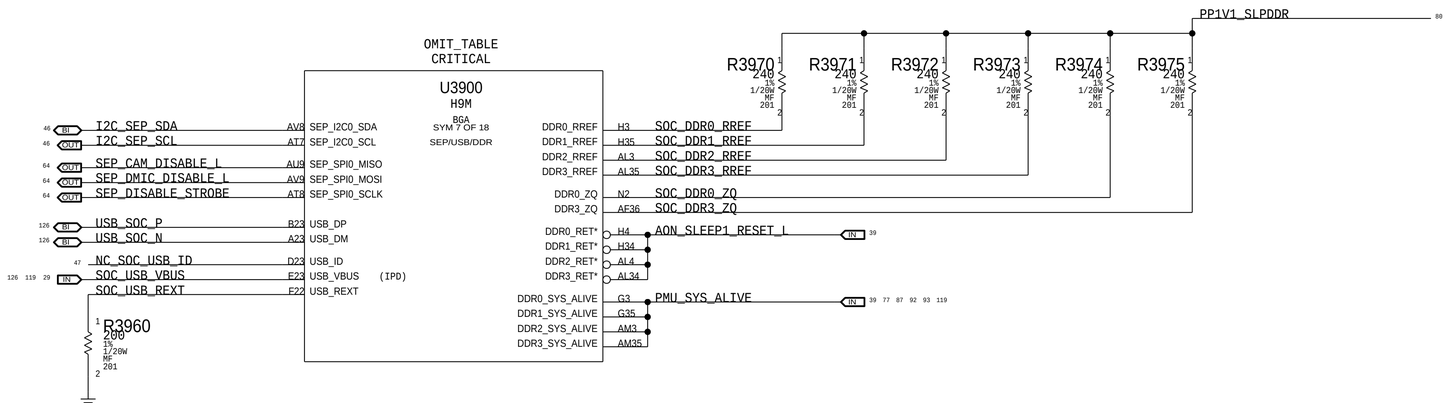

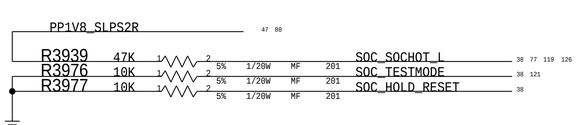

VINAFIX.COM

SYNC_MASTER=SILU SYNC_DATE=05/26/2017

PAGE TITLE
SoC GPIO/SEP/USB/DDR/Test

Apple Inc.

DRAWING NUMBER 051-02643 SIZE D
REVISION 4.0.0
BRANCH evt-0
PAGE 39 OF 200
SHEET 38 OF 131

NOTICE OF PROPRIETARY PROPERTY:
THE INFORMATION CONTAINED HEREIN IS THE PROPRIETARY PROPERTY OF APPLE INC.
THE POSESSOR AGREES TO THE FOLLOWING:
I TO MAINTAIN THIS DOCUMENT IN CONFIDENCE
II NOT TO REPRODUCE OR COPY IT
III NOT TO REVEAL OR PUBLISH IT IN WHOLE OR PART
IV ALL RIGHTS RESERVED

BOM_COST_GROUP=SOC

OMIT_TABLE
CRITICAL

U3900
H9M
BGA
SYM 6 OF 18
AOP

36	OUT	WLAN_CONTEXT_A	D3	AOP_FUNC[0]		AOP_PDM_CLK0	P6	PDM_DMIC_CLK0_R
36	OUT	WLAN_CONTEXT_B	F4	AOP_FUNC[1]		AOP_PDM_CLK1	K2	PDM_DMIC_CLK1_R
37	IN	ACCEL_INT1	M6	AOP_FUNC[2]	(IPD)	AOP_PDM_CLK2 (IPU)	J6	SMC_FIXTURE_MODE_L
37	IN	ACCEL_INT2	D4	AOP_FUNC[3]	(IPD)	AOP_PDM_CLK3 (IPU)	L6	NC_PLCAM_PROX_INT_L
35	OUT	BTUARTMUX_SEL_PCH	F3	AOP_FUNC[4]		AOP_PDM_CLK4 (IPU)	L5	NC_PLCAM_ROMEO_B2B_DETECT
20 15	IN	SOC_PERST_L	K6	AOP_FUNC[5]				
47	IN	NC_ALTIMETER_INT	E4	AOP_FUNC[6]	(IPD)	AOP_PDM_DATA0 (IPD)	J5	PDM_DMIC_DATA0
37	OUT	SPI_ACCEL_CS_L	J3	AOP_FUNC[7]		AOP_PDM_DATA1 (IPD)	K4	PDM_DMIC_DATA1
47	OUT	NC_SPI_ALTIMETER_CS_L	H6	AOP_FUNC[8]				
						AOP_SPI_MOSI	D2	SPI_AOP_SENSOR_MOSI_R
						AOP_SPI_SCLK	F2	SPI_AOP_SENSOR_CLK_R
47	OUT	NC_I2C_AOP_SCL	N6	AOP_I2C0_SCL		AOP_SPI_MISO	E2	SPI_AOP_SENSOR_MISO
47	BI	NC_I2C_AOP_SDA	G5	AOP_I2C0_SDA				

OMIT_TABLE
CRITICAL

U3900
H9M
BGA
SYM 5 OF 18
AON

120 50	IN	DFR_TOUCH_INT_L	AL6	AON_GPIO0		JTAG_TCK (IPU)	AK6	SWD_SOC_SWCLK
46	IN	CPU_SMC_THRMTRIP_L	AE6	AON_GPIO1	(IPU)	JTAG_TMS (IPU)	AN5	SWD_SOC_SWDIO
117	IN	GFX_SELF_THROTTLE_1V8	AT5	AON_GPIO2	(IPD)	JTAG_TDI (IPU)	AH6	DEBUG_JTAG_SOC_TDI
47	OUT	SMC_GPU_THRMTRIP	AN4	AON_GPIO3		JTAG_TDO	AP4	DEBUG_JTAG_SOC_TDO
18	IN	XDP_PRESENT_L	AK4	AON_GPIO4		JTAG_TRST* (IPD)	AJ6	TP_JTAG_SOC_TRST_L
61	OUT	CODEC_RESET_L	AV5	AON_GPIO5		JTAG_SEL	AC6	SOC_JTAG_SEL (DAP=0, TAP=1)
36	OUT	BT_DEV_WAKE	AR3	AON_GPIO6				
47	IN	NC_PCIEDN_WAKE_L	AG6	AON_GPIO7	(IPU)	DOCK_CONNECT	AN2	SOC_DOCK_CONNECT
47	OUT	NC_ENET_LOW_PWR	AU5	AON_GPIO8				
47	IN	TPAD_SPI_INT_L	AP2	AON_GPIO9		AON_SWD0_TMS	AJ4	WLAN_JTAG_TMS
47	IN	NC_SDCONN_STATE_CHANGE_L	AR4	AON_GPIO10	(IPU)	AON_SWD1_TMS (IPU)	AH4	NC_MESA_MENUKEY_L
47	IN	NC_ENET_MEDIA_SENSE	AN3	AON_GPIO11	(IPD)	AON_SWD01_TCK	AJ2	WLAN_JTAG_TCK
77	IN	PMU_INT_L	AT6	AON_GPIO12	(IPU)			
						WDOG	AJ5	SOC_WDOG
						AON_SLEEP1_RESET*	AF6	AON_SLEEP1_RESET_L
				SPMI_CLK_R		AON_SPMI_SCLK	AD6	
				SPMI_DATA_R		AON_SPMI_SDATA	AR2	
119 77	IN	PMU_CLK32K_SOC	AR5	RT_CLK32768				
		SOC_COLD_RESET_L	AK2	COLD_RESET*				
		R4039 5% 1/20W MF 201 4.7K	AK3	CFSB_AON				
121 119 77 64	IN	PMU_COLD_RESET_L						

PLACE_NEAR=U3900.AD6:5MM
PLACE_NEAR=U7800.M7:5MM

77	OUT	SPMI_CLK	R4036	20	5% 1/20W MF 201	
77	BI	SPMI_DATA	R4037	20	5% 1/20W MF 201	

OMIT_TABLE
CRITICAL

U3900
H9M
BGA
SYM 9 OF 18
SMC

PLACE_NEAR=U3900.U2:5MM
PLACE_NEAR=U3900.V2:5MM
PLACE_NEAR=U3900.U3:5MM
PLACE_NEAR=U3900.V4:5MM

118 39 20 12	BI	ESPI_IO<0> R4050 20 5% 1/20W MF 201	V2	ESPI_IO_R<0>		SMC_GPIO0	Y4	CODEC_WAKE_L
118 39 20 12	BI	ESPI_IO<1> R4051 20 5% 1/20W MF 201	U3	ESPI_IO_R<1>		SMC_GPIO1 (IPD)	Y8	BT_HOST_WAKE
118 39 20 12	BI	ESPI_IO<2> R4052 20 5% 1/20W MF 201	U4	ESPI_IO_R<2>		SMC_GPIO2 (IPD)	Y5	WLAN_HOST_WAKE
118 39 20 12	BI	ESPI_IO<3> R4053 20 5% 1/20W MF 201	V8	ESPI_IO_R<3>		SMC_GPIO3	AA2	GFX_THROTTLE_1V8_L
20	IN	ESPI_CLK60M	U2	SMC_ESPI_CLK	(IPD)	SMC_GPIO4	Y7	LID_OPEN_RIGHT
39 20 12	IN	ESPI_CS_L	V6	SMC_ESPI_CS*		SMC_GPIO5 (IPD)	Y6	PCC_EVENT
119 20 12	IN	ESPI_RESET_L	V5	SMC_ESPI_RESET*	(IPD)	SMC_GPIO6	AB2	NC_TPAD_VIBE_L
						SMC_GPIO7	AD5	TPAD_KBD_WAKE_L
46	IN	SMC_PECI_RX	M5	SMC_PECI_IN	(IPD)	SMC_GPIO8	AD2	LID_OPEN_LEFT
46	OUT	SMC_PECI_TX	T6	SMC_PECI_OUT		SMC_GPIO9	AB4	NC_SPI_DSCRPTR_OVERRIDE_L
121 46	OUT	SMC_PCH_PWROK	W7	PCH_PWROK		SMC_GPIO10 (IPU)	AC2	DISP_GCON_INT_L
121 46	OUT	SMC_PCH_SYS_PWROK	W8	SYS_PWROK		SMC_GPIO11	AC3	PCH_GCON_INT_L
						SMC_GPIO12	AA8	TPAD_ACTUATOR_DISABLE_L
46	OUT	SMC_RSMRST_L	W6	RSMRST*		SMC_GPIO13 (IPU)	AB3	TBT_WAKE_L
121 119 46	OUT	SMC_SYSRST_L	W4	SYS_RESET*		SMC_GPIO14 (IPU)	AE2	UPC_I2C_INT_L
131 119 77 12	IN	PM_SLP_S0_L	AA4	SLP_S0B		SMC_GPIO15 (IPD)	L4	NC_GNSS_HOST_WAKE
69 47 46	BI	SMC_PROCHOT_L	R5	PROCHOT*				
119 93 92 87 77 38	IN	PMU_SYS_ALIVE	AA6	SYS_ALIVE		SMC_ADC0	AG2	SMC_DCIN_VSENSE
						SMC_ADC1	AC4	SMC_DCIN_ISENSE
119 51	OUT	I2C_UPC_SCL	M3	SMC_I2C0_SCL		SMC_ADC2	AH3	SMC_PBUS_VSENSE
119 51	BI	I2C_UPC_SDA	J4	SMC_I2C0_SDA		SMC_ADC3	AD4	SMC_BMON_ISENSE
						SMC_ADC4	AB6	SMC_CPU_HI_ISENSE
51	OUT	I2C_SNS0_S0_SCL	N4	SMC_I2C1_SCL		SMC_ADC5	AH2	SMC_GPU_HS_ISENSE
51	BI	I2C_SNS0_S0_SDA	P4	SMC_I2C1_SDA		SMC_ADC6	AG4	SMC_P3V3_WLAN_ISENSE
						SMC_ADC7	AC5	SMC_P3V3_CAPLE_ISENSE
51	OUT	I2C_SNS1_S0_SCL	U5	SMC_I2C2_SCL				
51	BI	I2C_SNS1_S0_SDA	M2	SMC_I2C2_SDA		REFP_ADC	AF4	PP1V25_SLPS2R_SMC_AVREF 46
						58 REFM_ADC	AG3	GND_SMC_AVSS PLACE_NEAR=U3900.AF3:4MM
51	OUT	I2C_DISP_SCL	U6	SMC_I2C3_SCL				
51	BI	I2C_DISP_SDA	R4	SMC_I2C3_SDA		SMC_PWM0	J2	SMC_FAN_0_PWM
						SMC_TACH0	L3	SMC_FAN_0_TACH
119 51	OUT	I2C_PWR_SCL	P3	SMC_I2C4_SCL				
119 51	BI	I2C_PWR_SDA	T4	SMC_I2C4_SDA		SMC_PWM1	R6	SMC_FAN_1_PWM
						SMC_TACH1	L2	SMC_FAN_1_TACH
51	OUT	I2C_SNS_G3S_SCL	R2	SMC_I2C5_SCL				
51	BI	I2C_SNS_G3S_SDA	P2	SMC_I2C5_SDA		SMC_PWM2	M4	NC_SMC_LED_ONEWIRE
51	OUT	I2C_SSD_SCL	R3	SMC_I2C6_SCL		(IPU) SMC_UART0_RXD	V4	SMC_DEBUGPRT_RX
51	BI	I2C_SSD_SDA	T2	SMC_I2C6_SDA		SMC_UART0_TXD	V5	SMC_DEBUGPRT_TX
						SWD_OUT0_TCK	AE3	SSD0_SWCLK_UART_R2D
						SWD_OUT0_TMS	AA5	SSD0_SWDIO_UART_D2R
						SWD_OUT1_TCK	AF2	SSD1_SWCLK_UART_R2D
						SWD_OUT1_TMS	AA7	SSD1_SWDIO_UART_D2R

XW4089
SM
PLACE_NEAR=U3900.AF3:4MM

PP1V8_S5 80

R4046	10K	5% 1/20W MF 201	SOC_JTAG_SEL	39 121
R4047	100K	5% 1/20W MF 201	SOC_DOCK_CONNECT	30 31 39 119
R4054	100K	5% 1/20W MF 201	ESPI_IO<0>	12 20 39 118
R4055	100K	5% 1/20W MF 201	ESPI_IO<1>	12 20 39 118
R4056	100K	5% 1/20W MF 201	ESPI_IO<2>	12 20 39 118
R4057	100K	5% 1/20W MF 201	ESPI_IO<3>	12 20 39 118
R4059	100K	5% 1/20W MF 201	ESPI_CS_L	12 20 39

BOM_COST_GROUP=SOC

SYNC_MASTER=SILU SYNC_DATE=03/22/2017

PAGE TITLE
SoC AOP/AON/SMC

Apple Inc.

DRAWING NUMBER 051-02643 SIZE D
REVISION 4.0.0
BRANCH evt-0
PAGE 40 OF 200
SHEET 39 OF 131

NOTICE OF PROPRIETARY PROPERTY:
THE INFORMATION CONTAINED HEREIN IS THE PROPRIETARY PROPERTY OF APPLE INC.
THE POSESSOR AGREES TO THE FOLLOWING:
I TO MAINTAIN THIS DOCUMENT IN CONFIDENCE
II NOT TO REPRODUCE OR COPY IT
III NOT TO REVEAL OR PUBLISH IT IN WHOLE OR PART
IV ALL RIGHTS RESERVED

VINAFIX.COM

OMIT_TABLE
CRITICAL

U3900
H9M
BGA
SYM 4 OF 18
ISP

82 47	IN	MIPI_FTCAM_DATA_P<0>	B27	MIPI0C_DATA0_P			
82 47	IN	MIPI_FTCAM_DATA_N<0>	A27	MIPI0C_DATA0_N			
47	IN	GND	B25	MIPI0C_DATA1_P			
47	IN	GND	A25	MIPI0C_DATA1_N			
82 47	IN	MIPI_FTCAM_CLK_P	B26	MIPI0C_CLK_P			
82 47	IN	MIPI_FTCAM_CLK_N	A26	MIPI0C_CLK_N			
47	IN	GND	B28	MIPI1C_DATA0_P			
47	IN	GND	A28	MIPI1C_DATA0_N			
47	IN	GND	B30	MIPI1C_DATA1_P			
47	IN	GND	A30	MIPI1C_DATA1_N			
47	IN	GND	B29	MIPI1C_CLK_P			
47	IN	GND	A29	MIPI1C_CLK_N			
50	OUT	MIPI_DFR_DATA_P	B33	MIPID_DATA0_P			
50	OUT	MIPI_DFR_DATA_N	A33	MIPID_DATA0_N			
50	OUT	MIPI_DFR_CLK_P	B32	MIPID_CLK_P			
50	OUT	MIPI_DFR_CLK_N	A32	MIPID_CLK_N			
		SOC_MIPI0C_REXT	F23	MIPI0C_REXT			
		SOC_MIPI1C_REXT	F26	MIPI1C_REXT			
		SOC_MIPID_REXT	F27	MIPID_REXT			
						ISP_I2C0_SDA	AF32	I2C_FTCAM_SDA	BI 52
						ISP_I2C0_SCL	AH36	I2C_FTCAM_SCL	OUT 52
						ISP_I2C1_SDA	AB32	NC_I2C_PLCAM_SDA	BI 52
						ISP_I2C1_SCL	AG32	NC_I2C_PLCAM_SCL	OUT 52
						SENSOR0_CLK	AK35	NC_FTCAM_CLK12M_R	OUT 47
						SENSOR0_RST	AK34	NC_FTCAM_RESET_L	OUT 47
						SENSOR0_ISTRB	AJ33	DFR_TOUCH_RESET_L	OUT 50 120
						SENSOR1_CLK	AD33	NC_PLCAM_RX_CLK12M_R	OUT 47
						SENSOR1_RST	AC32	NC_PLCAM_RX_RESET_L	OUT 47
						SENSOR1_ISTRB	AC34	DFR_DISP_RESET_L	OUT 50 120
						SENSOR2_CLK	AD32	NC_PLCAM_TX_CLK12M_R	OUT 47
						SENSOR2_RST	AJ32	NC_PLCAM_TX_RESET_L	OUT 47
					(IPD)	SENSOR_INT	AA33	NC_PLCAM_TX_INT	IN 47
					(IPD)	DISP_TE	H32	DFR_DISP_TE	IN 50 120
						DISP_VSYNC	T36	BOARD_REV2	IN 46
						CLK32K_OUT	AK33	DFR_TOUCH_CLK32K_RESET_L	OUT 50 120

R4100 4.02K 1% 1/20W MF 201
R4101 4.02K 1% 1/20W MF 201
R4102 4.02K 1% 1/20W MF 201

OMIT_TABLE
CRITICAL

U3900
H9M
BGA
SYM 2 OF 18
I2C/UART/SPI/I2S

52	BI	I2C_SPKRAMP_L_SDA	AE35	I2C0_SDA			
52	OUT	I2C_SPKRAMP_L_SCL	AD35	I2C0_SCL			
52	BI	I2C_SPKRAMP_R_SDA	AE34	I2C1_SDA			
52	OUT	I2C_SPKRAMP_R_SCL	AG35	I2C1_SCL			
52	BI	I2C_CODEC_SDA	M34	I2C2_SDA			
52	OUT	I2C_CODEC_SCL	R33	I2C2_SCL			
120 52	BI	I2C_ALS_SDA	Y32	I2C3_SDA			
120 52	OUT	I2C_ALS_SCL	AE34	I2C3_SCL			
52	BI	I2C_DFR_SDA	T34	I2C4_SDA			
52	OUT	I2C_DFR_SCL	U32	I2C4_SCL			
52	BI	NC_I2C_SOC_5_SDA	R35	I2C5_SDA			
52	OUT	NC_I2C_SOC_5_SCL	U33	I2C5_SCL			
47	IN	NC_SPKR_ID1	P34	I2C6_SDA	(IPU)		
120 63	IN	SPKR_ID0	R34	I2C6_SCL	(IPU)		
126 119	IN	SOC_DEBUGPRT_RX	Y33	UART0_RXD	(IPU)		
126 119	OUT	SOC_DEBUGPRT_TX	Y34	UART0_TXD			
49	IN	UART_SE_D2R	B15	UART1_RXD			
49	OUT	UART_SE_R2D	A15	UART1_TXD			
49	IN	UART_SE_D2R_CTS_L	C15	UART1_CTS*			
49	OUT	UART_SE_R2D_RTS_L	D15	UART1_RTS*			
35	IN	UART_BT_D2R	J36	UART2_RXD			
35	OUT	UART_BT_R2D	J35	UART2_TXD			
35	IN	UART_BT_D2R_CTS_L	N38	UART2_CTS*			
35	OUT	UART_BT_R2D_RTS_L	M38	UART2_RTS*			
36	IN	UART_BT_LH_D2R	M36	UART3_RXD			
36	OUT	UART_BT_LH_R2D	N36	UART3_TXD			
47	IN	NC_UART_GNSS_D2R_CTS_L	M35	UART3_CTS*			
47	OUT	NC_UART_GNSS_R2D_RTS_L	U34	UART3_RTS*			
37 36	IN	UART_WLAN_D2R	B14	UART4_RXD			
37 36	OUT	UART_WLAN_R2D	A14	UART4_TXD			
37 36	IN	UART_WLAN_D2R_CTS_L	C14	UART4_CTS*			
37 36	OUT	UART_WLAN_R2D_RTS_L	C13	UART4_RTS*			
						SPI0_MISO	AR9	SPI_SOCROM_MISO	IN 46
						SPI0_MOSI	AR7	SPI_SOCROM_MOSI_R	
						SPI0_SCLK	AU7	SPI_SOCROM_CLK_R	
						SPI0_SSIN	AT9	SPI_SOCROM_CS_L	OUT 46
					(IPU)	SPI1_MISO	P36	SPI_TPAD_MISO	IN 46 47
						SPI1_MOSI	N34	SPI_TPAD_MOSI_R	OUT 47
						SPI1_SCLK	P35	SPI_TPAD_CLK_R	OUT 47
						SPI1_SSIN	T32	SPI_TPAD_CS_L	OUT 86
						SPI2_MISO	A19	SPI_MESA_MISO	IN 48
						SPI2_MOSI	A20	SPI_MESA_MOSI_R	OUT 47
						SPI2_SCLK	C19	SPI_MESA_CLK_R	OUT 47
						SPI2_SSIN	A18	WLAN_JTAG_TDI	OUT 37 121
						SPI3_MISO	C17	SPI_DFR_MISO	IN 47
						SPI3_MOSI	C18	SPI_DFR_MOSI_R	OUT 47
						SPI3_SCLK	B18	SPI_DFR_CLK_R	OUT 47
						SPI3_SSIN	A17	SPI_DFR_CS_L	OUT 50 120
					(IPD)	I2S0_DIN	AC33	I2S_SPKRAMP_L_D2R	IN 52 63
						I2S0_DOUT	AG34	I2S_SPKRAMP_L_R2D_R	OUT 47
						I2S0_BCLK	AA32	I2S_SPKRAMP_L_BCLK_R	OUT 47
						I2S0_LRCK	AG33	I2S_SPKRAMP_L_LRCLK	OUT 47
						I2S0_MCK	AR35	NC_DFR_TOUCH_RSVD	BI 47
					(IPD)	I2S1_DIN	B20	I2S_SPKRAMP_R_D2R	IN 47
						I2S1_DOUT	C20	I2S_SPKRAMP_R_R2D_R	OUT 47
						I2S1_BCLK	C21	I2S_SPKRAMP_R_BCLK_R	OUT 47
						I2S1_LRCK	A21	I2S_SPKRAMP_R_LRCLK	OUT 47
						I2S1_MCK	D21	NC_PCHROM_SW_EN	OUT 47
					(IPD)	I2S2_DIN	AH34	I2S_CODEC_D2R	IN 61
						I2S2_DOUT	AB34	I2S_CODEC_R2D_R	OUT 47
						I2S2_BCLK	AF33	I2S_CODEC_BCLK_R	OUT 47
						I2S2_LRCK	AH35	I2S_CODEC_LRCLK	OUT 47
						I2S2_MCK	AR33	NC_I2S_CODEC_MCLK	OUT 47
					(IPD)	I2S3_DIN	AD36	NC_I2S_HAWKING_D2R	IN 47
						I2S3_DOUT	AB35	NC_I2S_CODEC1_R2D_R	OUT 47
						I2S3_BCLK	AE36	NC_I2S_HAWKING_BCLK	OUT 47
						I2S3_LRCK	W34	NC_I2S_HAWKING_LRCLK	OUT 47
						I2S3_MCK	AG36	NC_I2S_CODEC1_MCLK	OUT 47

PLACE_NEAR=U3900.AR7:5MM
PLACE_NEAR=U3900.AU7:5MM

R4171 20 5% 1/20W MF 201 SPI_SOCROM_MOSI OUT 46
R4172 20 5% 1/20W MF 201 SPI_SOCROM_CLK OUT 46

WWW.FIX.RU

BOM_COST_GROUP=SOC

SYNC_MASTER=H9M and PMIC SYNC_DATE=03/02/2017

PAGE TITLE
SoC ISP/I2C/UART/SPI/I2S

Apple Inc.

DRAWING NUMBER 051-02643
SIZE D
REVISION 4.0.0
BRANCH evt-0
PAGE 41 OF 200
SHEET 40 OF 131

NOTICE OF PROPRIETARY PROPERTY:
THE INFORMATION CONTAINED HEREIN IS THE PROPRIETARY PROPERTY OF APPLE INC.
THE POSESSOR AGREES TO THE FOLLOWING:
I TO MAINTAIN THIS DOCUMENT IN CONFIDENCE
II NOT TO REPRODUCE OR COPY IT
III NOT TO REVEAL OR PUBLISH IT IN WHOLE OR PART
IV ALL RIGHTS RESERVED

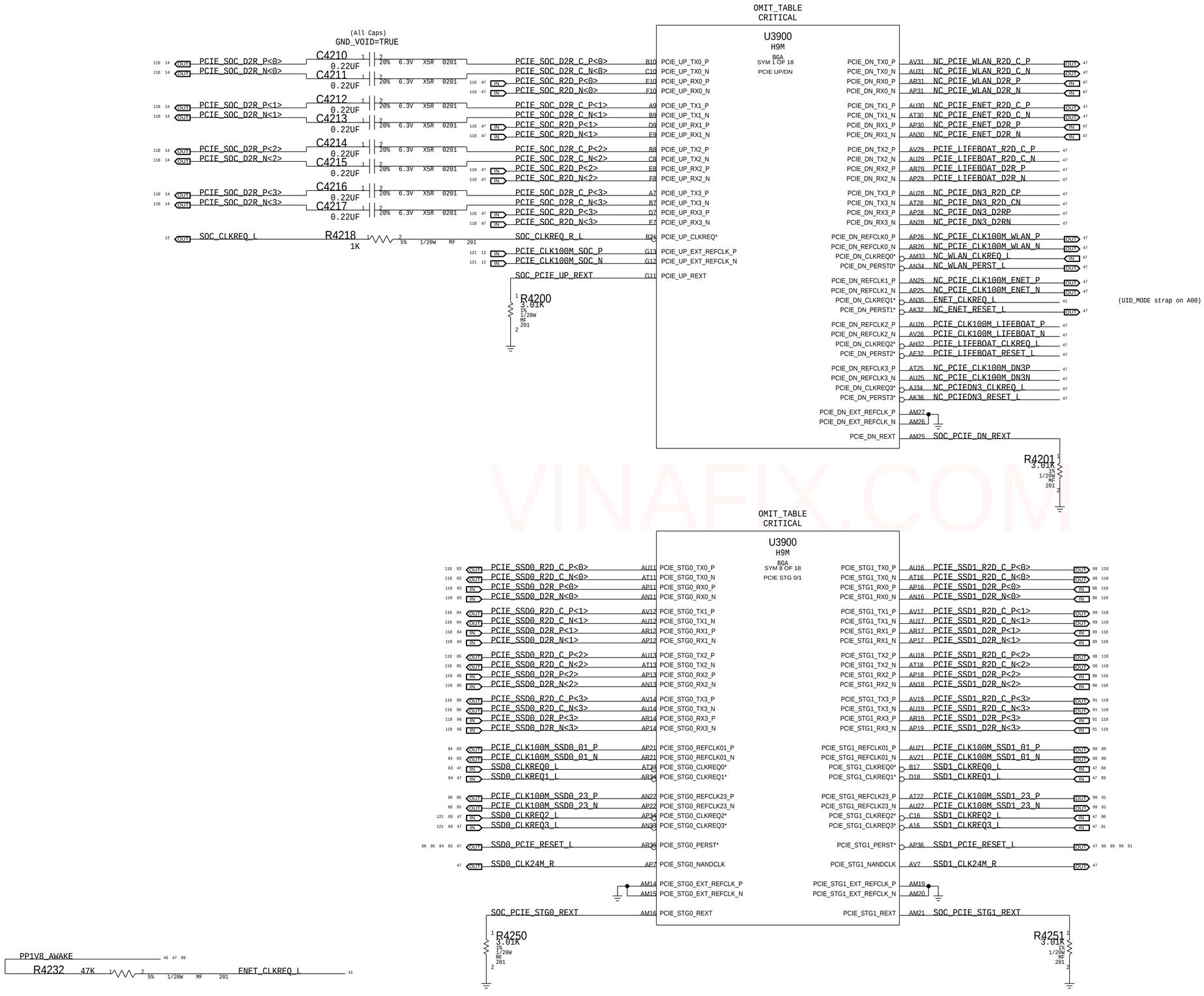

VINAFIX.COM

SYNC_MASTER=SILU SYNC_DATE=03/15/2017

PAGE TITLE

SoC PCIe

Apple Inc.

NOTICE OF PROPRIETARY PROPERTY:
THE INFORMATION CONTAINED HEREIN IS THE PROPRIETARY PROPERTY OF APPLE INC.
THE POSESSOR AGREES TO THE FOLLOWING:
I TO MAINTAIN THIS DOCUMENT IN CONFIDENCE
II NOT TO REPRODUCE OR COPY IT
III NOT TO REVEAL OR PUBLISH IT IN WHOLE OR PART
IV ALL RIGHTS RESERVED

DRAWING NUMBER	051-02643
SIZE	D
REVISION	4.0.0
BRANCH	evt-0
PAGE	42 OF 200
SHEET	41 OF 131

Current estimates @ 105C & 2GB from Gibraltar Power Specification Rev 0.5.3

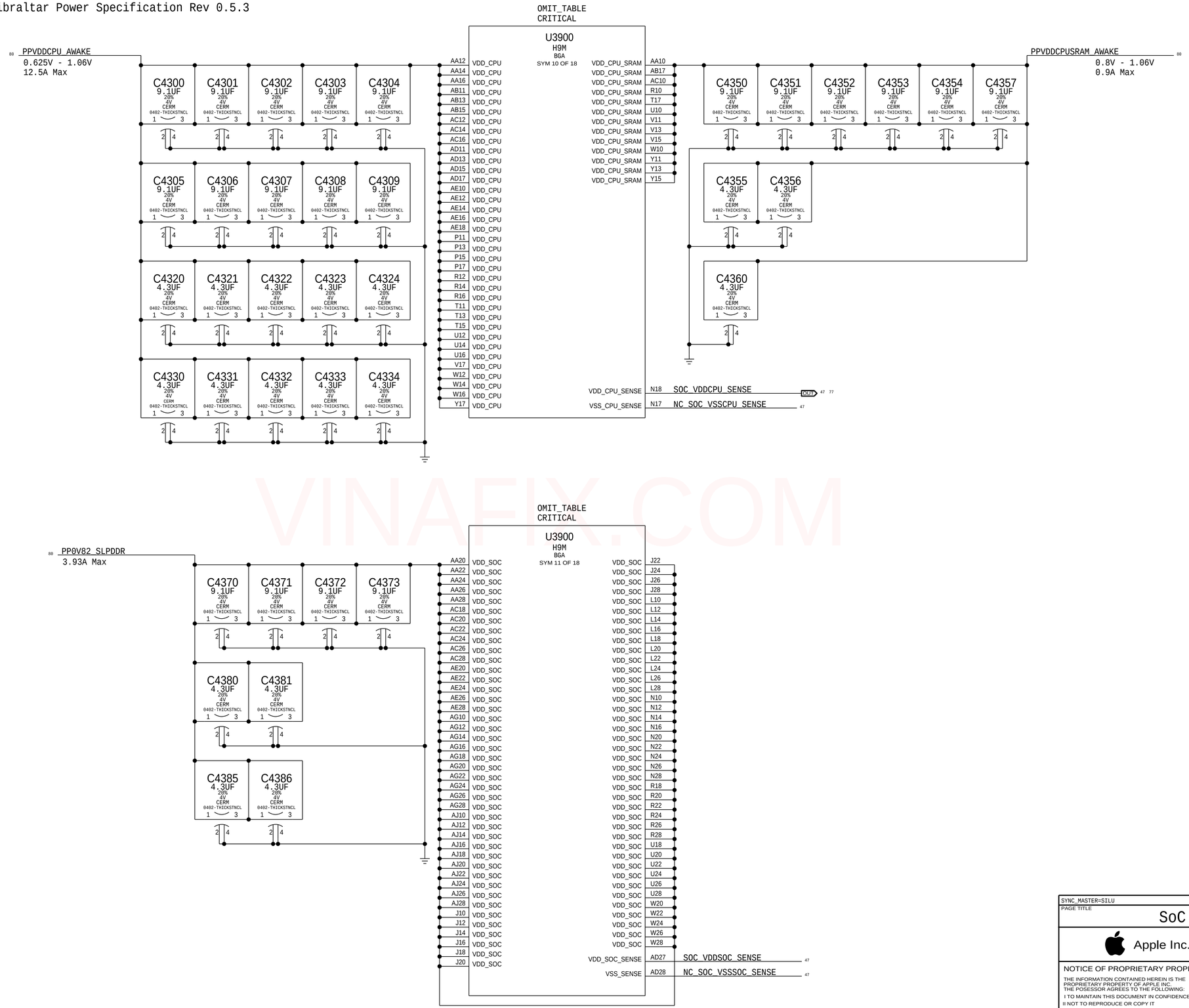

VINAFIX.COM

BOM_COST_GROUP=SOC

SYNC_MASTER=SILU SYNC_DATE=04/04/2017

PAGE TITLE

SoC Power 1

Apple Inc.

DRAWING NUMBER 051-02643 SIZE D

REVISION 4.0.0

BRANCH evt-0

PAGE 43 OF 200

SHEET 42 OF 131

NOTICE OF PROPRIETARY PROPERTY:

THE INFORMATION CONTAINED HEREIN IS THE PROPRIETARY PROPERTY OF APPLE INC.
THE POSESSOR AGREES TO THE FOLLOWING:

I TO MAINTAIN THIS DOCUMENT IN CONFIDENCE

II NOT TO REPRODUCE OR COPY IT

III NOT TO REVEAL OR PUBLISH IT IN WHOLE OR PART

IV ALL RIGHTS RESERVED

Current estimates @ 105C & 2GB from Gibraltar Power Specification Rev 0.5.3

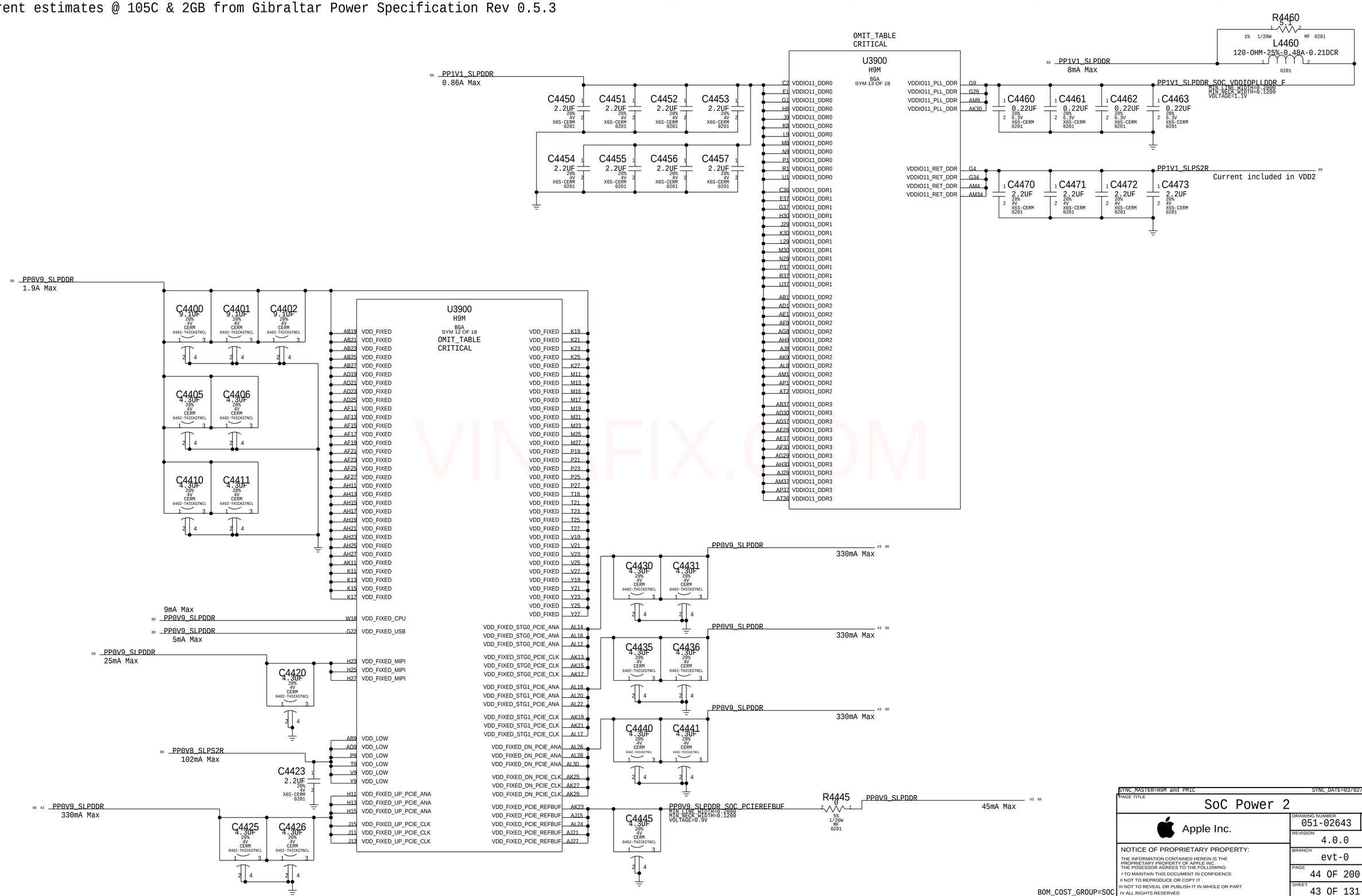

VINAFIX.COM

Current estimates @ 105C & 2GB from Gibraltar Power Specification Rev 0.5.3

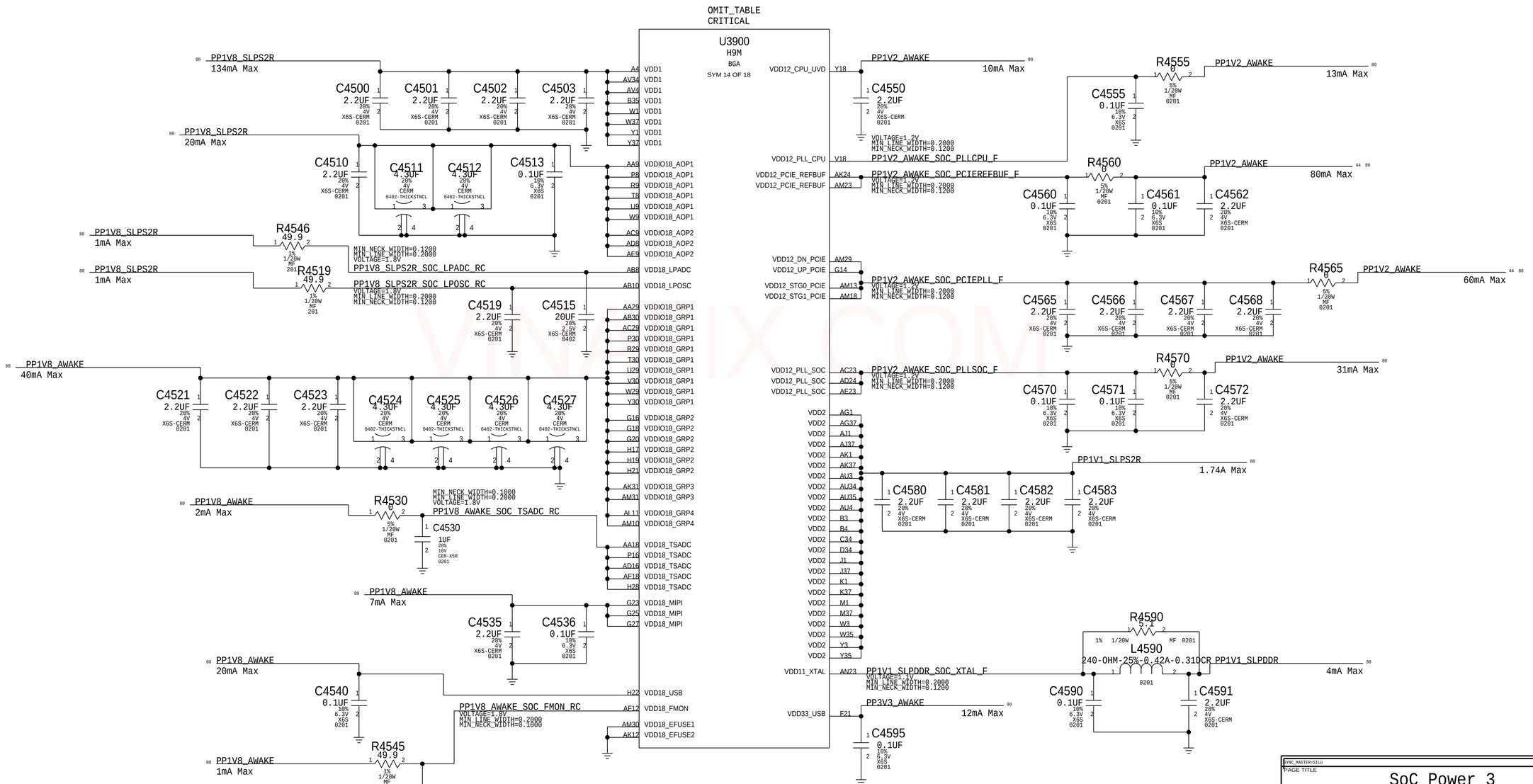

VINAFIX.COM

BOM_COST_GROUP=SOC

SYNC_MASTER=S1LU SYNC_DATE=05/26/2017

PAGE TITLE

SoC Power 3

Apple Inc.

DRAWING NUMBER	051-02643
SIZE	D
REVISION	4.0.0
BRANCH	evt-0
PAGE	45 OF 200
SHEET	44 OF 131

NOTICE OF PROPRIETARY PROPERTY:
THE INFORMATION CONTAINED HEREIN IS THE PROPRIETARY PROPERTY OF APPLE INC.
THE POSESSOR AGREES TO THE FOLLOWING:
I TO MAINTAIN THIS DOCUMENT IN CONFIDENCE
II NOT TO REPRODUCE OR COPY IT
III NOT TO REVEAL OR PUBLISH IT IN WHOLE OR PART
IV ALL RIGHTS RESERVED

U3900 H9M BGA SYM 15 OF 18

OMIT_TABLE
CRITICAL

A1	VSS	VSS	AE4
A10	VSS	VSS	AE5
A11	VSS	VSS	AE7
A2	VSS	VSS	AE8
A22	VSS	VSS	AF1
A24	VSS	VSS	AF10
A3	VSS	VSS	AF14
A31	VSS	VSS	AF16
A34	VSS	VSS	AF20
A35	VSS	VSS	AF22
A36	VSS	VSS	AF24
A37	VSS	VSS	AF26
A5	VSS	VSS	AF28
A6	VSS	VSS	AF29
A8	VSS	VSS	AF3
AA1	VSS	VSS	AF31
AA11	VSS	VSS	AF35
AA13	VSS	VSS	AF37
AA15	VSS	VSS	AF5
AA17	VSS	VSS	AF7
AA19	VSS	VSS	AF8
AA21	VSS	VSS	AG11
AA23	VSS	VSS	AG13
AA25	VSS	VSS	AG15
AA27	VSS	VSS	AG17
AA3	VSS	VSS	AG19
AA30	VSS	VSS	AG21
AA31	VSS	VSS	AG23
AA35	VSS	VSS	AG25
AA37	VSS	VSS	AG27
AB12	VSS	VSS	AG30
AB14	VSS	VSS	AG31
AB16	VSS	VSS	AG5
AB18	VSS	VSS	AG7
AB20	VSS	VSS	AG9
AB22	VSS	VSS	AH1
AB24	VSS	VSS	AH10
AB26	VSS	VSS	AH12
AB28	VSS	VSS	AH14
AB29	VSS	VSS	AH16
AB31	VSS	VSS	AH18
AB33	VSS	VSS	AH20
AB5	VSS	VSS	AH22
AB7	VSS	VSS	AH24
AC1	VSS	VSS	AH26
AC11	VSS	VSS	AH28
AC13	VSS	VSS	AH29
AC15	VSS	VSS	AH31
AC17	VSS	VSS	AH33
AC19	VSS	VSS	AH37
AC21	VSS	VSS	AH5
AC25	VSS	VSS	AH7
AC27	VSS	VSS	AH8
AC30	VSS	VSS	AJ11
AC31	VSS	VSS	AJ13
AC35	VSS	VSS	AJ17
AC37	VSS	VSS	AJ19
AC7	VSS	VSS	AJ23
AC8	VSS	VSS	AJ25
AD10	VSS	VSS	AJ3
AD12	VSS	VSS	AJ30
AD14	VSS	VSS	AJ31
AD18	VSS	VSS	AJ35
AD20	VSS	VSS	AJ7
AD22	VSS	VSS	AJ9
AD26	VSS	VSS	AK10
AD29	VSS	VSS	AK14
AD3	VSS	VSS	AK16
AD31	VSS	VSS	AK18
AD34	VSS	VSS	AK20
AD7	VSS	VSS	AK22
AE11	VSS	VSS	AK26
AE13	VSS	VSS	AK28
AE15	VSS	VSS	AK5
AE17	VSS	VSS	AK7
AE19	VSS	VSS	AK8
AE21	VSS	VSS	AL1
AE25	VSS	VSS	AL10
AE27	VSS	VSS	AL13
AE30	VSS	VSS	AL15
AE31	VSS	VSS	AL19
AE33	VSS	VSS	AL2

U3900 H9M BGA SYM 16 OF 18

OMIT_TABLE
CRITICAL

AL21	VSS	VSS	AT19
AL23	VSS	VSS	AT20
AL25	VSS	VSS	AT21
AL27	VSS	VSS	AT23
AL29	VSS	VSS	AT24
AL31	VSS	VSS	AT26
AL32	VSS	VSS	AT27
AL33	VSS	VSS	AT29
AL36	VSS	VSS	AT3
AL37	VSS	VSS	AT31
AL5	VSS	VSS	AT32
AL7	VSS	VSS	AT34
AL9	VSS	VSS	AT35
AM11	VSS	VSS	AT37
AM12	VSS	VSS	AT4
AM17	VSS	VSS	AU1
AM2	VSS	VSS	AU10
AM22	VSS	VSS	AU15
AM24	VSS	VSS	AU2
AM28	VSS	VSS	AU20
AM32	VSS	VSS	AU23
AM36	VSS	VSS	AU24
AM5	VSS	VSS	AU27
AM6	VSS	VSS	AU32
AM7	VSS	VSS	AU33
AM8	VSS	VSS	AU36
AN1	VSS	VSS	AU37
AN10	VSS	VSS	AU6
AN12	VSS	VSS	AU8
AN14	VSS	VSS	AV1
AN15	VSS	VSS	AV10
AN17	VSS	VSS	AV11
AN19	VSS	VSS	AV13
AN20	VSS	VSS	AV15
AN21	VSS	VSS	AV16
AN24	VSS	VSS	AV18
AN26	VSS	VSS	AV2
AN27	VSS	VSS	AV20
AN29	VSS	VSS	AV22
AN31	VSS	VSS	AV25
AN32	VSS	VSS	AV27
AN37	VSS	VSS	AV28
AN6	VSS	VSS	AV3
AN7	VSS	VSS	AV30
AN8	VSS	VSS	AV32
AN9	VSS	VSS	AV33
AP10	VSS	VSS	AV35
AP15	VSS	VSS	AV36
AP20	VSS	VSS	AV37
AP23	VSS	VSS	AV6
AP24	VSS	VSS	B1
AP27	VSS	VSS	B11
AP3	VSS	VSS	B13
AP32	VSS	VSS	B16
AP33	VSS	VSS	B19
AP35	VSS	VSS	B2
AP5	VSS	VSS	B22
AP6	VSS	VSS	B24
AP8	VSS	VSS	B31
AP9	VSS	VSS	B34
AR1	VSS	VSS	B36
AR10	VSS	VSS	B37
AR11	VSS	VSS	B5
AR13	VSS	VSS	B6
AR15	VSS	VSS	C1
AR16	VSS	VSS	C11
AR18	VSS	VSS	C22
AR20	VSS	VSS	C23
AR22	VSS	VSS	C24
AR23	VSS	VSS	C25
AR24	VSS	VSS	C26
AR25	VSS	VSS	C27
AR27	VSS	VSS	C28
AR28	VSS	VSS	C29
AR30	VSS	VSS	C3
AR32	VSS	VSS	C30
AR37	VSS	VSS	C31
AR6	VSS	VSS	C32
AR8	VSS	VSS	C33
AT1	VSS	VSS	C35
AT10	VSS	VSS	C37
AT12	VSS	VSS	C4
AT14	VSS	VSS	C5
AT15	VSS	VSS	C6
AT17	VSS		

U3900 H9M BGA SYM 17 OF 18

OMIT_TABLE
CRITICAL

C7	VSS	VSS	G10
C9	VSS	VSS	G15
D1	VSS	VSS	G17
D10	VSS	VSS	G19
D11	VSS	VSS	G2
D12	VSS	VSS	G21
D13	VSS	VSS	G24
D14	VSS	VSS	G26
D16	VSS	VSS	G28
D17	VSS	VSS	G30
D19	VSS	VSS	G31
D20	VSS	VSS	G32
D22	VSS	VSS	G33
D24	VSS	VSS	G36
D25	VSS	VSS	G6
D26	VSS	VSS	G7
D27	VSS	VSS	G8
D28	VSS	VSS	H1
D29	VSS	VSS	H10
D30	VSS	VSS	H12
D31	VSS	VSS	H14
D32	VSS	VSS	H16
D33	VSS	VSS	H18
D35	VSS	VSS	H2
D36	VSS	VSS	H20
D37	VSS	VSS	H24
D5	VSS	VSS	H26
D6	VSS	VSS	H29
D8	VSS	VSS	H31
E11	VSS	VSS	H33
E12	VSS	VSS	H36
E13	VSS	VSS	H37
E14	VSS	VSS	H5
E15	VSS	VSS	H7
E16	VSS	VSS	H9
E17	VSS	VSS	J17
E18	VSS	VSS	J19
E19	VSS	VSS	J21
E20	VSS	VSS	J23
E21	VSS	VSS	J25
E22	VSS	VSS	J27
E24	VSS	VSS	J30
E25	VSS	VSS	J31
E26	VSS	VSS	J7
E27	VSS	VSS	J8
E28	VSS	VSS	K10
E29	VSS	VSS	K12
E3	VSS	VSS	K14
E30	VSS	VSS	K16
E31	VSS	VSS	K18
E32	VSS	VSS	K20
E33	VSS	VSS	K22
E34	VSS	VSS	K24
E35	VSS	VSS	K26
E36	VSS	VSS	K28
E5	VSS	VSS	K29
E6	VSS	VSS	K3
F1	VSS	VSS	K31
F11	VSS	VSS	K33
F12	VSS	VSS	K35
F13	VSS	VSS	K5
F14	VSS	VSS	K7
F15	VSS	VSS	K9
F16	VSS	VSS	L1
F17	VSS	VSS	L11
F18	VSS	VSS	L13
F19	VSS	VSS	L15
F20	VSS	VSS	L17
F24	VSS	VSS	L19
F25	VSS	VSS	L21
F28	VSS	VSS	L23
F29	VSS	VSS	L25
F30	VSS	VSS	L27
F31	VSS	VSS	L30
F32	VSS	VSS	L31
F33	VSS	VSS	L37
F34	VSS	VSS	L7
F35	VSS	VSS	L8
F36	VSS	VSS	M10
F37	VSS	VSS	M12
F5	VSS	VSS	M14
F6	VSS	VSS	M16
F7	VSS	VSS	M18
F9	VSS	VSS	M20

U3900 H9M BGA SYM 18 OF 18

OMIT_TABLE
CRITICAL

M22	VSS	VSS	T3
M24	VSS	VSS	T31
M26	VSS	VSS	T33
M28	VSS	VSS	T35
M29	VSS	VSS	T37
M31	VSS	VSS	T5
M7	VSS	VSS	T7
M9	VSS	VSS	U11
N1	VSS	VSS	U13
N11	VSS	VSS	U15
N13	VSS	VSS	U17
N15	VSS	VSS	U19
N19	VSS	VSS	U21
N21	VSS	VSS	U23
N23	VSS	VSS	U25
N25	VSS	VSS	U27
N27	VSS	VSS	U30
N3	VSS	VSS	U31
N30	VSS	VSS	U7
N31	VSS	VSS	U8
N33	VSS	VSS	V1
N35	VSS	VSS	V10
N37	VSS	VSS	V12
N5	VSS	VSS	V14
N7	VSS	VSS	V16
N8	VSS	VSS	V20
P10	VSS	VSS	V22
P12	VSS	VSS	V24
P14	VSS	VSS	V26
P18	VSS	VSS	V28
P20	VSS	VSS	V29
P22	VSS	VSS	V3
P24	VSS	VSS	V31
P26	VSS	VSS	V35
P28	VSS	VSS	V37
P29	VSS	VSS	W11
P31	VSS	VSS	W13
P5	VSS	VSS	W15
P7	VSS	VSS	W17
R11	VSS	VSS	W19
R13	VSS	VSS	W2
R15	VSS	VSS	W21
R17	VSS	VSS	W23
R19	VSS	VSS	W25
R21	VSS	VSS	W27
R23	VSS	VSS	W30
R25	VSS	VSS	W31
R27	VSS	VSS	W33
R30	VSS	VSS	W36
R31	VSS	VSS	W5
R7	VSS	VSS	Y10
R8	VSS	VSS	Y12
T1	VSS	VSS	Y14
T10	VSS	VSS	Y16
T12	VSS	VSS	Y2
T14	VSS	VSS	Y20
T16	VSS	VSS	Y22
T18	VSS	VSS	Y24
T20	VSS	VSS	Y26
T22	VSS	VSS	Y28
T24	VSS	VSS	Y29
T26	VSS	VSS	Y31
T28	VSS	VSS	Y36
T29	VSS		

INFIX.COM

SYNC_MASTER=H9M and PMIC SYNC_DATE=03/02/2017

PAGE TITLE
SoC Ground

Apple Inc.

DRAWING NUMBER 051-02643 SIZE D

REVISION 4.0.0

BRANCH evt-0

PAGE 46 OF 200

SHEET 45 OF 131

NOTICE OF PROPRIETARY PROPERTY:
THE INFORMATION CONTAINED HEREIN IS THE PROPRIETARY PROPERTY OF APPLE INC.
THE POSESSOR AGREES TO THE FOLLOWING:
I TO MAINTAIN THIS DOCUMENT IN CONFIDENCE
II NOT TO REPRODUCE OR COPY IT
III NOT TO REVEAL OR PUBLISH IT IN WHOLE OR PART
IV ALL RIGHTS RESERVED

BOM_COST_GROUP=SOC

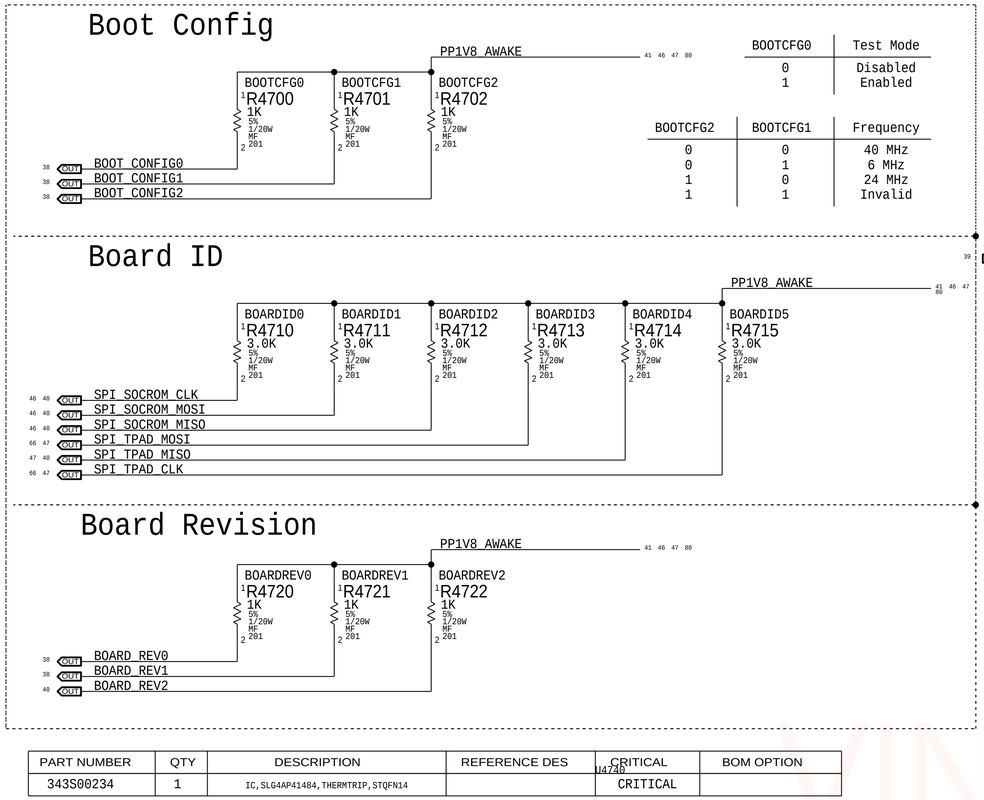

BOOTCFG0	Test Mode
0	Disabled
1	Enabled

BOOTCFG2	BOOTCFG1	Frequency
0	0	40 MHz
0	1	6 MHz
1	0	24 MHz
1	1	Invalid

PART NUMBER	QTY	DESCRIPTION	REFERENCE DES	CRITICAL	BOM OPTION
343S00234	1	IC,SLG4AP41484,THERMTRIP,STQFN14	U4740	CRITICAL	

PECI Level Shifting

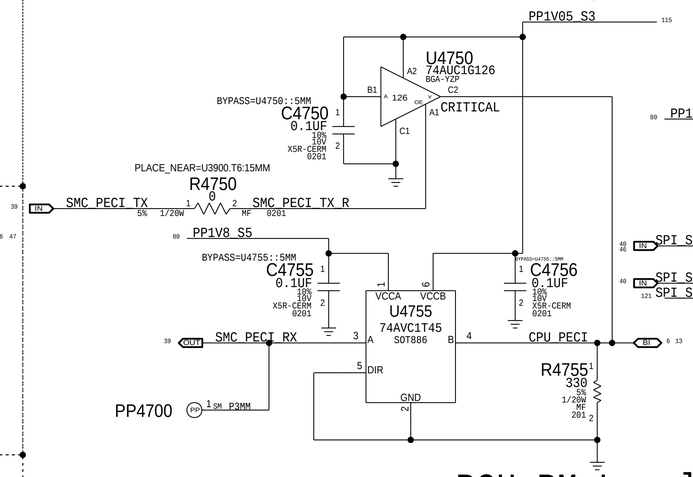

SoC ROM

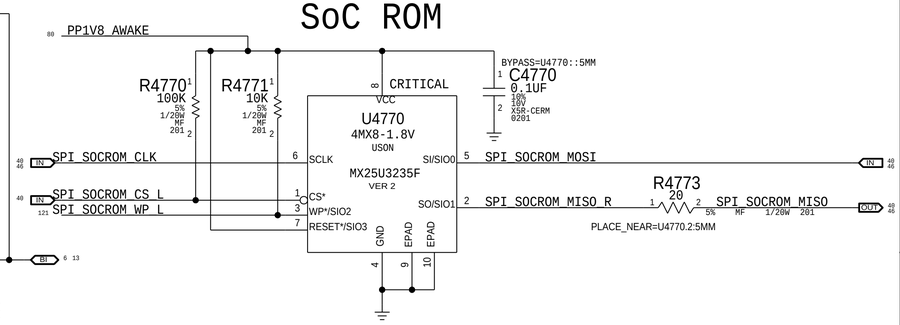

PCH PM Level Shifting

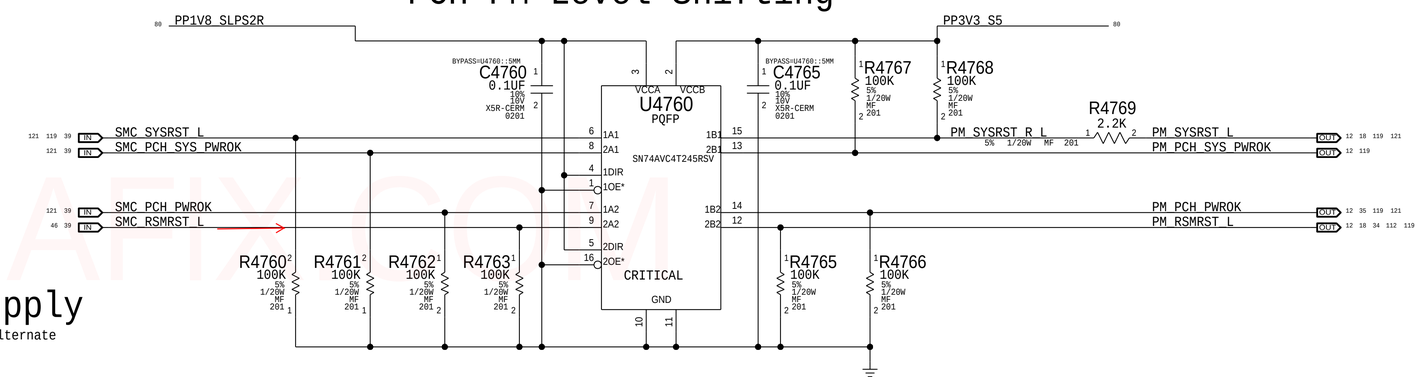

SMC AVREF Supply

Footprint supports 353S01042 alternate

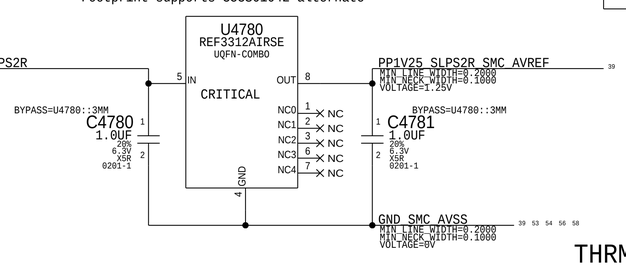

SEP EEPROM

(Write: 0xA2, Read 0xA3)

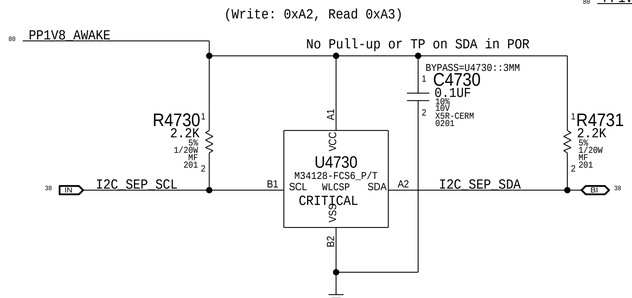

PROCHOT Isolation

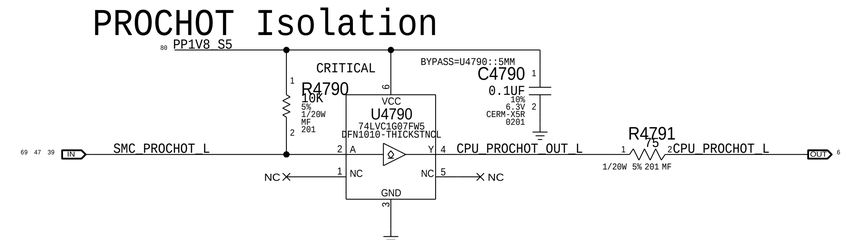

THRMTRIP# Isolation

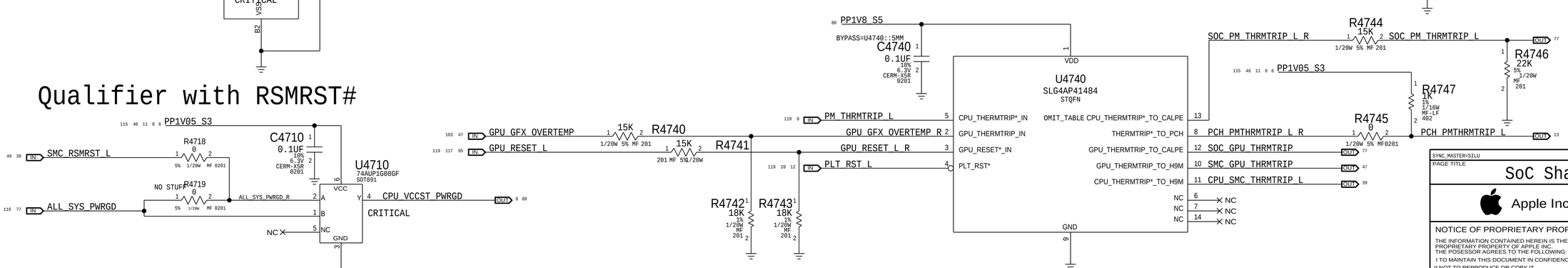

Qualifier with RSMRST#

BOM_COST_GROUP=SOC

SYNC_MASTER=SILU	SYNC_DATE=08/09/2017
PAGE TITLE	SoC Shared Support
Apple Inc.	DRAWING NUMBER 051-02643 / SIZE D
	REVISION 4.0.0
	BRANCH evt-0
	PAGE 47 OF 200
	SHEET 46 OF 131

NOTICE OF PROPRIETARY PROPERTY:
THE INFORMATION CONTAINED HEREIN IS THE PROPRIETARY PROPERTY OF APPLE INC.
THE POSESSOR AGREES TO THE FOLLOWING:
I TO MAINTAIN THIS DOCUMENT IN CONFIDENCE
II NOT TO REPRODUCE OR COPY IT
III NOT TO REVEAL OR PUBLISH IT IN WHOLE OR PART
IV ALL RIGHTS RESERVED

PCIe Up R2D AC Caps

(All Caps)

PCIE_SOC_R2D_C_P<0>	C4820	0.22UF	20% 6.3V X5R 0201	PCIE_SOC_R2D_P<0>	41 118
PCIE_SOC_R2D_C_N<0>	C4821	0.22UF	20% 6.3V X5R 0201	PCIE_SOC_R2D_N<0>	41 118
PCIE_SOC_R2D_C_P<1>	C4822	0.22UF	20% 6.3V X5R 0201	PCIE_SOC_R2D_P<1>	41 118
PCIE_SOC_R2D_C_N<1>	C4823	0.22UF	20% 6.3V X5R 0201	PCIE_SOC_R2D_N<1>	41 118
PCIE_SOC_R2D_C_P<2>	C4824	0.22UF	20% 6.3V X5R 0201	PCIE_SOC_R2D_P<2>	41 118
PCIE_SOC_R2D_C_N<2>	C4825	0.22UF	20% 6.3V X5R 0201	PCIE_SOC_R2D_N<2>	41 118
PCIE_SOC_R2D_C_P<3>	C4826	0.22UF	20% 6.3V X5R 0201	PCIE_SOC_R2D_P<3>	41 118
PCIE_SOC_R2D_C_N<3>	C4827	0.22UF	20% 6.3V X5R 0201	PCIE_SOC_R2D_N<3>	41 118

GPIO Source Termination

I2S_SPKRAMP_L_R2D_R	R4843	20	PLACE_NEAR=U3900.AG34:5MM	I2S_SPKRAMP_L_R2D	62
I2S_SPKRAMP_L_BCLK_R	R4844	20	PLACE_NEAR=U3900.AA32:5MM	I2S_SPKRAMP_L_BCLK	62
I2S_SPKRAMP_L_LRCLK_R	R4863	20	PLACE_NEAR=U3900.AA32:10MM	I2S_SPKRAMP_L_LRCLK	40
I2S_SPKRAMP_R_R2D_R	R4845	20	PLACE_NEAR=U3900.C20:5MM	I2S_SPKRAMP_R_R2D	63
I2S_SPKRAMP_R_BCLK_R	R4846	20	PLACE_NEAR=U3900.C21:5MM	I2S_SPKRAMP_R_BCLK	63
I2S_SPKRAMP_R_LRCLK_R	R4864	20	PLACE_NEAR=U3900.C21:10MM	I2S_SPKRAMP_R_LRCLK	40
I2S_CODEC_R2D_R	R4847	20	PLACE_NEAR=U3900.AB34:5MM	I2S_CODEC_R2D	61
I2S_CODEC_BCLK_R	R4848	20	PLACE_NEAR=U3900.AF33:5MM	I2S_CODEC_BCLK	61
I2S_CODEC_LRCLK_R	R4865	20	PLACE_NEAR=U3900.AF33:5MM	I2S_CODEC_LRCLK	40
SPI_TPAD_MOSI_R	R4851	20	PLACE_NEAR=U3900.N34:5MM	SPI_TPAD_MOSI	46 66
SPI_TPAD_CLK_R	R4852	20	PLACE_NEAR=U3900.P35:5MM	SPI_TPAD_CLK	46 66
SPI_MESA_MOSI_R	R4853	20	PLACE_NEAR=U3900.A20:5MM	SPI_MESA_MOSI	48
SPI_MESA_CLK_R	R4854	20	PLACE_NEAR=U3900.C19:5MM	SPI_MESA_CLK	48
SPI_DFR_MISO_R	R4866	20	PLACE_NEAR=J5100.7:5MM	SPI_DFR_MISO	40
SPI_DFR_MOSI_R	R4855	20	PLACE_NEAR=U3900.C18:5MM	SPI_DFR_MOSI	50 120
SPI_DFR_CLK_R	R4856	20	PLACE_NEAR=U3900.B18:5MM	SPI_DFR_CLK	50 120
SSD0_CLK24M_R	R4857	20	PLACE_NEAR=U3900.AP7:5MM	SSD0_CLK24M	47 83 85
SSD1_CLK24M_R	R4858	20	PLACE_NEAR=U3900.AV7:5MM	SSD1_CLK24M	47 88 90
PDM_DMIC_CLK0_R	R4859	20	PLACE_NEAR=U3900.P6:15MM	PDM_DMIC_CLK0	64
PDM_DMIC_CLK1_R	R4860	20	PLACE_NEAR=U3900.K2:15MM	PDM_DMIC_CLK1	64
SPI_AOP_SENSOR_MOSI_R	R4861	20	PLACE_NEAR=U3900.D2:10MM	SPI_AOP_SENSOR_MOSI	37
SPI_AOP_SENSOR_CLK_R	R4862	20	PLACE_NEAR=U3900.F2:15MM	SPI_AOP_SENSOR_CLK	37
SPI_AOP_SENSOR_MISO_R	R4869	20	PLACE_NEAR=U3900.E2:15MM	SPI_AOP_SENSOR_MISO	39
SPI_TPAD_MISO	R4809	20	PLACE_NEAR=U3900.P36:20MM	SPI_TPAD_MISO_R	56

S4E_X4PLUS

Lifeboat

PCIE_LIFEBOAT_R2D_C_P	PCIE_LIFEBOAT_R2D_C_P	TP-P5	TP4800
PCIE_LIFEBOAT_R2D_C_N	PCIE_LIFEBOAT_R2D_C_N	TP-P5	TP4801
PCIE_LIFEBOAT_D2R_P	PCIE_LIFEBOAT_D2R_P	TP-P5	TP4802
PCIE_LIFEBOAT_D2R_N	PCIE_LIFEBOAT_D2R_N	TP-P5	TP4803
PCIE_CLK100M_LIFEBOAT_P	PCIE_CLK100M_LIFEBOAT_P	TP-P5	TP4804
PCIE_CLK100M_LIFEBOAT_N	PCIE_CLK100M_LIFEBOAT_N	TP-P5	TP4805
PCIE_LIFEBOAT_CLKREQ_L	PCIE_LIFEBOAT_CLKREQ_L	TP-P5	TP4806
PCIE_LIFEBOAT_RESET_L	PCIE_LIFEBOAT_RESET_L	TP-P5	TP4807

MAKE_BASE

SMC_FIXTURE_MODE_L — SMC_FIXTURE_MODE_L (MAKE_BASE)

R4801 100K 5% 1/20W MF 201 — FIXMODE_NO

PP1V8_SLPS2R
PP1V8_AWAKE

R4883	47K	SSD0_CLKREQ0_L	41 83
R4884	47K	SSD0_CLKREQ1_L	41 84
R4887	47K	SSD0_CLKREQ2_L	41 85 121
R4888	47K	SSD0_CLKREQ3_L	41 86 121
R4889 (S4E_X4PLUS)	47K	SSD1_CLKREQ0_L	41 88
R4890 (S4E_X4PLUS)	47K	SSD1_CLKREQ1_L	41 89
R4891 (S4E_X4PLUS)	47K	SSD1_CLKREQ2_L	41 90
R4892 (S4E_X4PLUS)	47K	SSD1_CLKREQ3_L	41 91
R4895	100K	SSD_PMU_RESET_L	38 87 92 119
R4885	100K	SSD0_PCIE_RESET_L	41 83 84 85 86
R4886	47K	SSD0_CLK24M	47 83 85
R4893 (S4E_X4PLUS)	100K	SSD1_PCIE_RESET_L	41 88 89 90 91
R4894 (S4E_X4PLUS)	47K	SSD1_CLK24M	47 88 90
R4870	0	I2S_SPKRAMP_R_D2R	40

5% 1/20W MF 201 (0201)

Lid Detect Sensors

Clamshell Open = High
Clamshell closed = Low

OMIT_TABLE J4800 AMR-MLB-X502 — R4807 330K 5% 1/20W MF 201 — AMR_PU — PP1V8_SLPS2R — SMC_LID_LEFT — R4804 10K 5% 1/20W MF 201 — LID_OPEN_LEFT (MAKE_BASE)

OMIT_TABLE J4801 AMR-MLB-X502 — R4808 330K 5% 1/20W MF 201 — AMR_PU — PP1V8_SLPS2R — SMC_LID_RIGHT — R4805 10K 5% 1/20W MF 201 — LID_OPEN_RIGHT (MAKE_BASE)

PP1V8_SLPS2R — C4802 0.1UF 10% 6.3V CERM-X5R 0201 (BYPASS=U4802::5MM) — U4802 74LVC1G32 SOT891 — IPD_LID_OPEN

No Connects

NC_SPI_ALTIMETER_CS_L	NC_SPI_ALTIMETER_CS_L	39
NC_ALTIMETER_INT	NC_ALTIMETER_INT	39
NC_PMU_CLK32K_GNSS_R	NC_PMU_CLK32K_GNSS_R	77
NC_UART_GNSS_D2R_CTS_L	NC_UART_GNSS_D2R_CTS_L	40
NC_UART_GNSS_R2D_RTS_L	NC_UART_GNSS_R2D_RTS_L	40
NC_GNSS_HOST_TIME	NC_GNSS_HOST_TIME	38
NC_GNSS_HOST_WAKE	NC_GNSS_HOST_WAKE	39
NC_GNSS_DEV_WAKE	NC_GNSS_DEV_WAKE	38
NC_ENET_MEDIA_SENSE	NC_ENET_MEDIA_SENSE	39
NC_ENET_LOW_PWR	NC_ENET_LOW_PWR	39
NC_I2S_HAWKING_D2R	NC_I2S_HAWKING_D2R	40
NC_I2S_HAWKING_LRCLK	NC_I2S_HAWKING_LRCLK	40
NC_I2S_HAWKING_BCLK	NC_I2S_HAWKING_BCLK	40
NC_I2S_CODEC1_R2D_R	NC_I2S_CODEC1_R2D_R	40
NC_PLCAM_RX_CLK12M_R	NC_PLCAM_RX_CLK12M_R	40
NC_PLCAM_RX_RESET_L	NC_PLCAM_RX_RESET_L	40
NC_PLCAM_TX_CLK12M_R	NC_PLCAM_TX_CLK12M_R	40
NC_PLCAM_TX_RESET_L	NC_PLCAM_TX_RESET_L	40
NC_PLCAM_TX_INT	NC_PLCAM_TX_INT	40
NC_PLCAM_TX_THROTTLE	NC_PLCAM_TX_THROTTLE	38
NC_PLCAM_PROX_INT_L	NC_PLCAM_PROX_INT_L	39
NC_PLCAM_ROMEO_B2B_DETECT	NC_PLCAM_ROMEO_B2B_DETECT	39
NC_PCHROM_SW_EN	NC_PCHROM_SW_EN	40
NC_SDCONN_STATE_CHANGE_L	NC_SDCONN_STATE_CHANGE_L	39
NC_FTCAM_RESET_L	NC_FTCAM_RESET_L	40
NC_FTCAM_CLK12M_R	NC_FTCAM_CLK12M_R	40
NC_I2S_CODEC_MCLK	NC_I2S_CODEC_MCLK	40
NC_I2S_CODEC1_MCLK	NC_I2S_CODEC1_MCLK	40
NC_SPI_DSCRPTR_OVERRIDE_L	NC_SPI_DSCRPTR_OVERRIDE_L	39
NC_I2C_AOP_SCL	NC_I2C_AOP_SCL	39
NC_I2C_AOP_SDA	NC_I2C_AOP_SDA	39
NC_SOC_USB_ID	NC_SOC_USB_ID	38
NC_SOC_TST_CLKOUT	NC_SOC_TST_CLKOUT	38
NC_SOC_AMUXOUT	NC_SOC_AMUXOUT	38

MAKE_BASE=TRUE NO_TEST=1

NC_SPKR_ID1	NC_SPKR_ID1	40
NC_SMC_LED_ONEWIRE	NC_SMC_LED_ONEWIRE	39
NC_PCIEDN_WAKE_L	NC_PCIEDN_WAKE_L	39
NC_MESA_MENUKEY_L	NC_MESA_MENUKEY_L	39
NC_TPAD_VIBE_L	NC_TPAD_VIBE_L	39
NC_ENET_RESET_L	NC_ENET_RESET_L	41
NC_WLAN_DEV_WAKE	NC_WLAN_DEV_WAKE	38
NC_SOC_VSSCPU_SENSE	NC_SOC_VSSCPU_SENSE	42
NC_SOC_VSSSOC_SENSE	NC_SOC_VSSSOC_SENSE	42
NC_DFR_TOUCH_RSVD	NC_DFR_TOUCH_RSVD	40
NC_PCIE_DN3_R2D_CP	NC_PCIE_DN3_R2D_CP	41
NC_PCIE_DN3_R2D_CN	NC_PCIE_DN3_R2D_CN	41
NC_PCIE_DN3_D2RP	NC_PCIE_DN3_D2RP	41
NC_PCIE_DN3_D2RN	NC_PCIE_DN3_D2RN	41
NC_PCIE_CLK100M_DN3P	NC_PCIE_CLK100M_DN3P	41
NC_PCIE_CLK100M_DN3N	NC_PCIE_CLK100M_DN3N	41
NC_PCIEDN3_CLKREQ_L	NC_PCIEDN3_CLKREQ_L	41
NC_PCIEDN3_RESET_L	NC_PCIEDN3_RESET_L	41
NC_PCIE_WLAN_R2D_C_P	NC_PCIE_WLAN_R2D_C_P	41
NC_PCIE_WLAN_R2D_C_N	NC_PCIE_WLAN_R2D_C_N	41
NC_PCIE_WLAN_D2R_P	NC_PCIE_WLAN_D2R_P	41
NC_PCIE_WLAN_D2R_N	NC_PCIE_WLAN_D2R_N	41
NC_WLAN_CLKREQ_L	NC_WLAN_CLKREQ_L	41
NC_WLAN_PERST_L	NC_WLAN_PERST_L	41
NC_PCIE_ENET_R2D_C_P	NC_PCIE_ENET_R2D_C_P	41
NC_PCIE_ENET_R2D_C_N	NC_PCIE_ENET_R2D_C_N	41
NC_PCIE_ENET_D2R_P	NC_PCIE_ENET_D2R_P	41
NC_PCIE_ENET_D2R_N	NC_PCIE_ENET_D2R_N	41
NC_PCIE_CLK100M_ENET_P	NC_PCIE_CLK100M_ENET_P	41
NC_PCIE_CLK100M_ENET_N	NC_PCIE_CLK100M_ENET_N	41
NC_PCIE_CLK100M_WLAN_P	NC_PCIE_CLK100M_WLAN_P	41
NC_PCIE_CLK100M_WLAN_N	NC_PCIE_CLK100M_WLAN_N	41

MAKE_BASE=TRUE NO_TEST=1 (MAKE_BASE)

Signal Aliases

TPAD_KBD_WAKE_L	TPAD_KBD_WAKE_L	39
TPAD_SPI_INT_L	TPAD_SPI_INT_L	39
TPAD_ACTUATOR_DISABLE_L	TPAD_ACTUATOR_DISABLE_L	39
GPU_GFX_OVERTEMP	GPU_GFX_OVERTEMP	46 103
SMC_DEBUGPRT_RX	SMC_DEBUGPRT_RX	126 119 39
SMC_DEBUGPRT_TX	SMC_DEBUGPRT_TX	126 119 39
SMC_GPU_THRMTRIP	SMC_GPU_THRMTRIP	39
GND	GND	40
GND	GND	40
GND	GND	40
GND	GND	40
GND	GND	40
GND	GND	40
GND	GND	40
GND	GND	40

MAKE_BASE

SOC_VDDSOC_SENSE	P3MM SM	PP	PP4800
SOC_VDDCPU_SENSE	P3MM SM	PP	PP4801
SSD0_OCARINA_WP_L	P5MM-SP SM-SP	PP	PP4802
SSD1_OCARINA_WP_L	P5MM-SP SM-SP	PP	PP4803
SMC_PROCHOT_L	P3MM SM	PP	PP4808

SWD_SOC_SWCLK	SWD_SOC_SWCLK	126 39	29
SWD_SOC_SWDIO	SWD_SOC_SWDIO	126 39	29

MAKE_BASE=TRUE
INT PU SOC 50k

CHGR_INT_L	PLACE_SIDE=BOTTOM SM P2MM	PP	PP4809
MIPI_FTCAM_DATA_P<0>	PLACE_NEAR=U3900.B27:10MM SM P2MM	PP	PP4804
MIPI_FTCAM_DATA_N<0>	PLACE_NEAR=U3900.A26:10MM SM P2MM	PP	PP4805
MIPI_FTCAM_CLK_P	PLACE_NEAR=U3900.B26:10MM SM P2MM	PP	PP4806
MIPI_FTCAM_CLK_N	PLACE_NEAR=U3900.A26:10MM SM P2MM	PP	PP4807

	BOM OPTIONS
Proto 0 — BOARD_REV:111	BOARDREV2,BOARDREV1,BOARDREV0
Proto 1 — BOARD_REV:110	BOARDREV2,BOARDREV1
Proto 2 — BOARD_REV:101	BOARDREV2,BOARDREV0
Pre-EVT — BOARD_REV:100	BOARDREV2
EVT — BOARD_REV:011	BOARDREV1,BOARDREV0
DVT — BOARD_REV:010	BOARDREV1
PVT — BOARD_REV:001	BOARDREV0
BOARD_REV:000	

BOM_COST_GROUP=SOC

PAGE TITLE
SoC Project Support

Apple Inc.

DRAWING NUMBER	051-02643
SIZE	D
REVISION	4.0.0
BRANCH	evt-0
PAGE	48 OF 200
SHEET	47 OF 131

NOTICE OF PROPRIETARY PROPERTY:
THE INFORMATION CONTAINED HEREIN IS THE PROPRIETARY PROPERTY OF APPLE INC.
THE POSESSOR AGREES TO THE FOLLOWING:
I TO MAINTAIN THIS DOCUMENT IN CONFIDENCE
II NOT TO REPRODUCE OR COPY IT
III NOT TO REVEAL OR PUBLISH IT IN WHOLE OR PART
IV ALL RIGHTS RESERVED

ISOLATE FROM OTHER COMPONENTS/NETS AS MUCH AS POSSIBLE

MOJAVE 16V BOOST

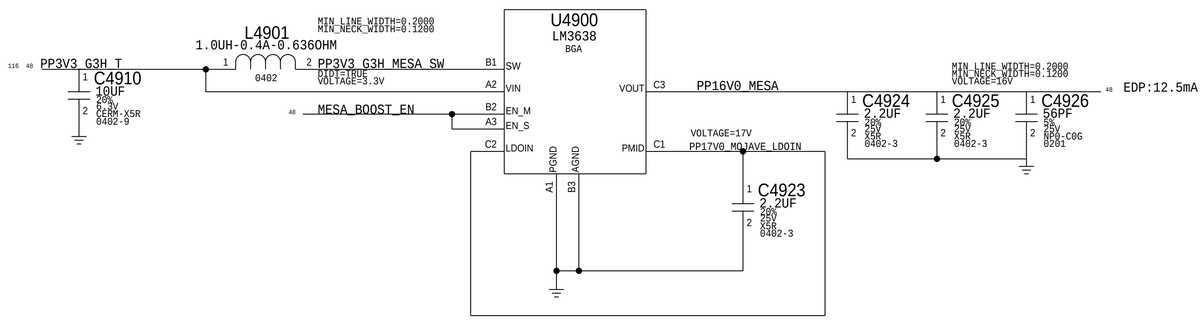

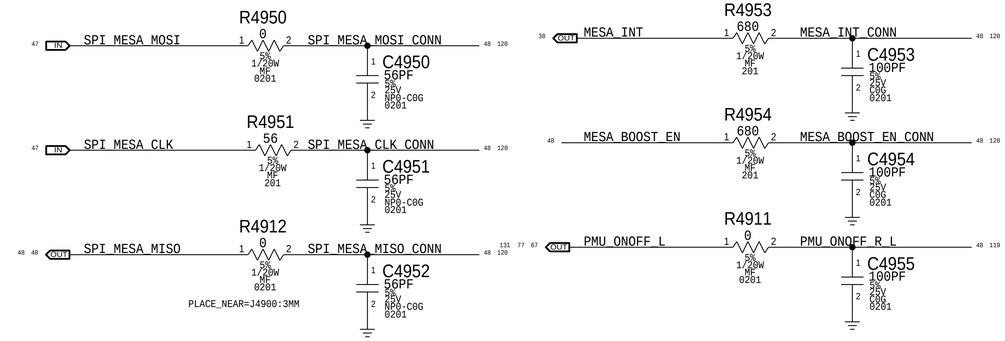

3.0V MESA

Option to feed LDO from 5V in case of dropout issue

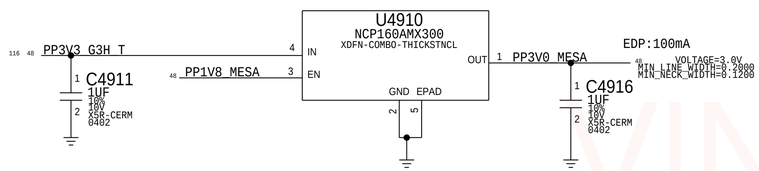

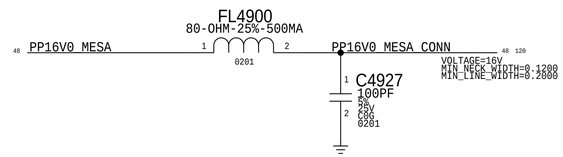

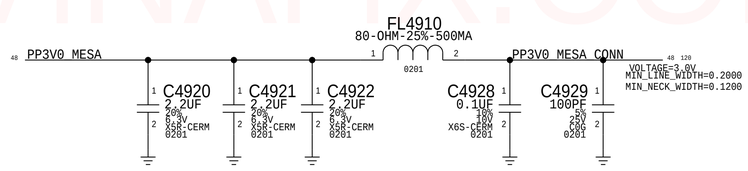

MESA FLEX CONNECTOR

Proto1 Connector for X434/X435 Support
PLUG (516S00115) - X434/ X435 Jumper
Recptacle (516S00203) - X362/X363 MLB

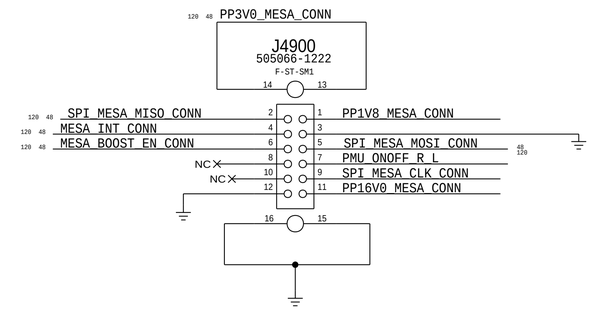

Mesa Power Sequencing Requirements

Power On: 1V8 -> 3V3 -> 16V0

1.8V MESA

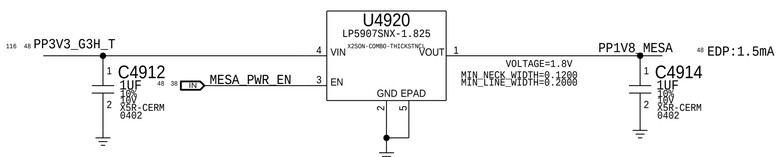

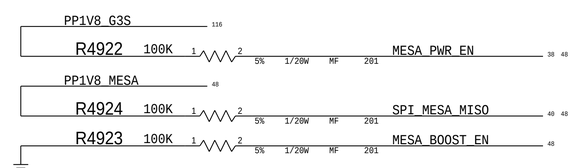

BOM_COST_GROUP=T151

PAGE TITLE	MESA
Apple Inc.	DRAWING NUMBER 051-02643 SIZE D
	REVISION 4.0.0
NOTICE OF PROPRIETARY PROPERTY: THE INFORMATION CONTAINED HEREIN IS THE PROPRIETARY PROPERTY OF APPLE INC. THE POSESSOR AGREES TO THE FOLLOWING: I TO MAINTAIN THIS DOCUMENT IN CONFIDENCE II NOT TO REPRODUCE OR COPY IT III NOT TO REVEAL OR PUBLISH IT IN WHOLE OR PART IV ALL RIGHTS RESERVED	BRANCH evt-0
	PAGE 49 OF 200
	SHEET 48 OF 131

VINAFIX.COM

STOCKHOLM 2017

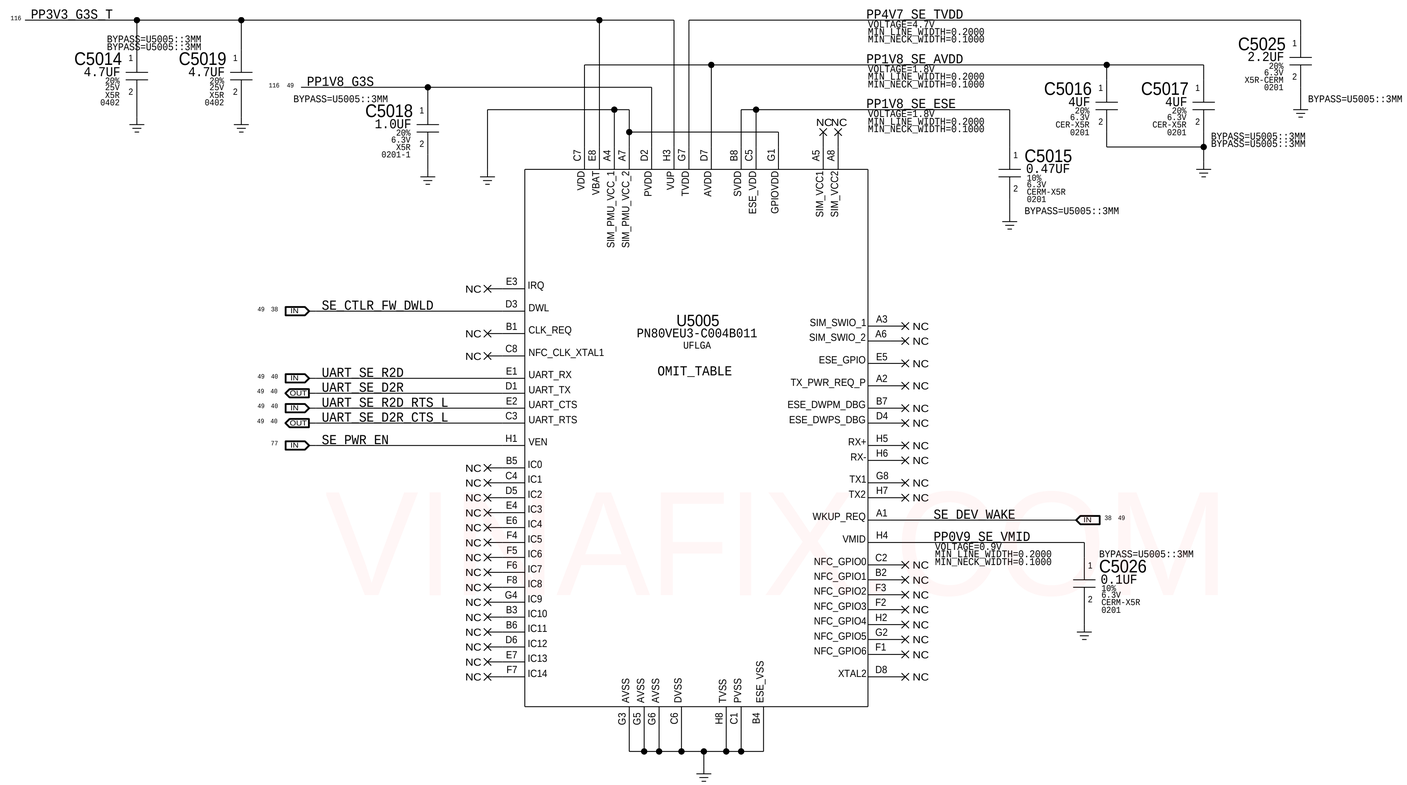

PART NUMBER	QTY	DESCRIPTION	REFERENCE DES	CRITICAL	BOM OPTION
998-11132	1	IC,RTM4,ES2.1,PN80V,DEV,UFLGA64	U5005	CRITICAL	SE:DEV_2017
338S00253	1	IC,RTM4,ES2.1,PN80V,PRD,UFLGA64	U5005	CRITICAL	SE:PROD_2017

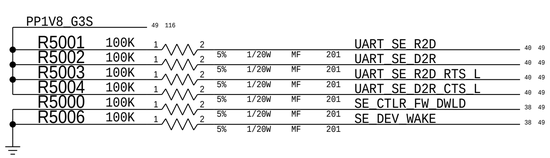

BOM_COST_GROUP=T151

SYNC_MASTER=S1LU SYNC_DATE=05/05/2017

PAGE TITLE: Secure Element

Apple Inc.

DRAWING NUMBER: 051-02643 SIZE: D

REVISION: 4.0.0

BRANCH: evt-0

PAGE: 50 OF 200

SHEET: 49 OF 131

NOTICE OF PROPRIETARY PROPERTY:
THE INFORMATION CONTAINED HEREIN IS THE PROPRIETARY PROPERTY OF APPLE INC.
THE POSESSOR AGREES TO THE FOLLOWING:
I TO MAINTAIN THIS DOCUMENT IN CONFIDENCE
II NOT TO REPRODUCE OR COPY IT
III NOT TO REVEAL OR PUBLISH IT IN WHOLE OR PART
IV ALL RIGHTS RESERVED

T208 Support

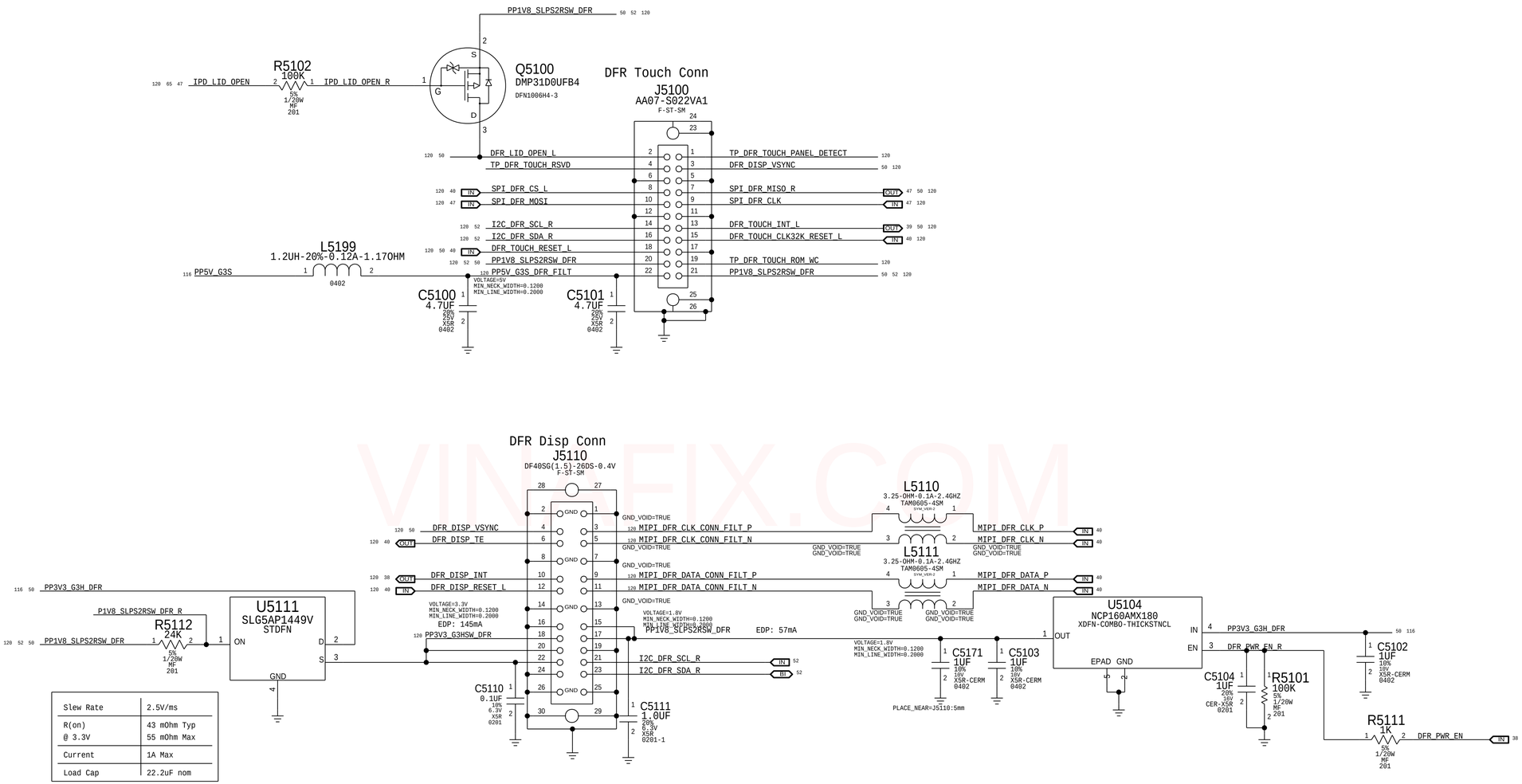

Slew Rate	2.5V/ms
R(on) @ 3.3V	43 mOhm Typ 55 mOhm Max
Current	1A Max
Load Cap	22.2uF nom

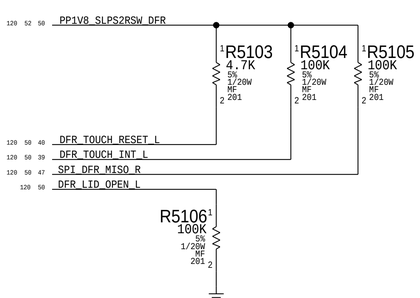

BOM_COST_GROUP=T151

PAGE TITLE	DFR & T208 Support
	Apple Inc.
DRAWING NUMBER	051-02643
SIZE	D
REVISION	4.0.0
BRANCH	evt-0
PAGE	51 OF 200
SHEET	50 OF 131

NOTICE OF PROPRIETARY PROPERTY:
THE INFORMATION CONTAINED HEREIN IS THE PROPRIETARY PROPERTY OF APPLE INC.
THE POSESSOR AGREES TO THE FOLLOWING:
I TO MAINTAIN THIS DOCUMENT IN CONFIDENCE
II NOT TO REPRODUCE OR COPY IT
III NOT TO REVEAL OR PUBLISH IT IN WHOLE OR PART
IV ALL RIGHTS RESERVED

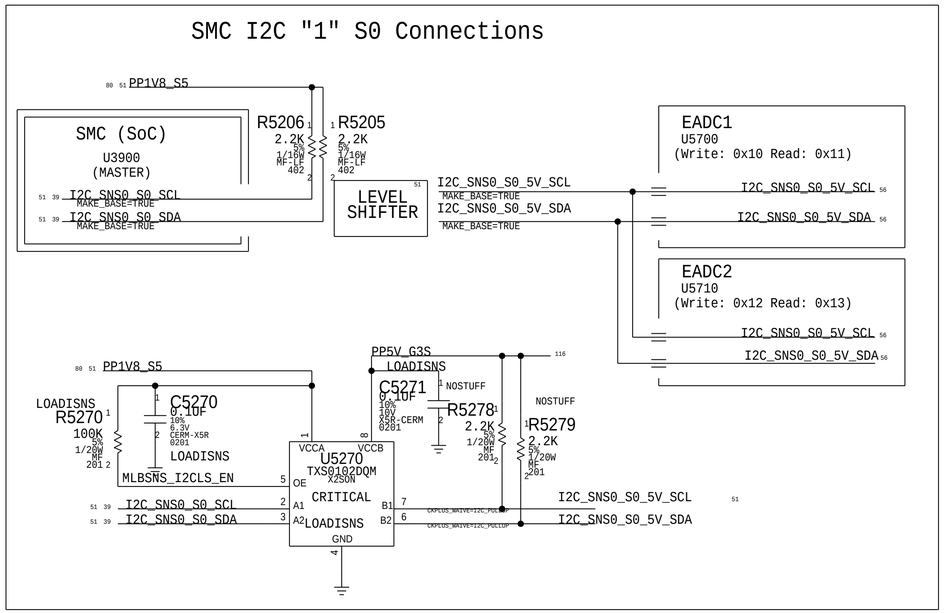

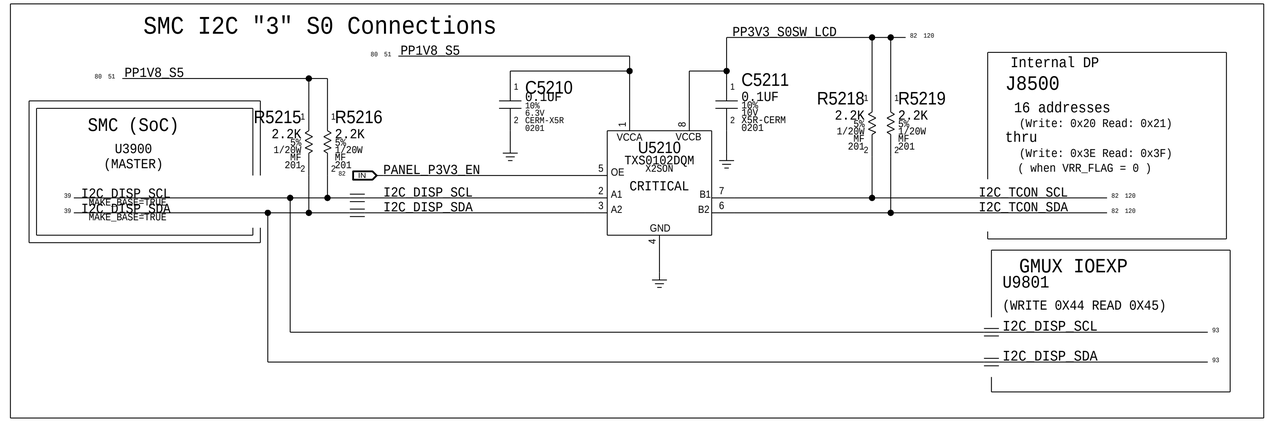

PART NUMBER	QTY	DESCRIPTION	REFERENCE DES	CRITICAL	BOM OPTION
117S0059	2	RES,2.2K,1/20W,0201,SMD,MF	R5230,R5231		OCARINA_I2C:2.2K

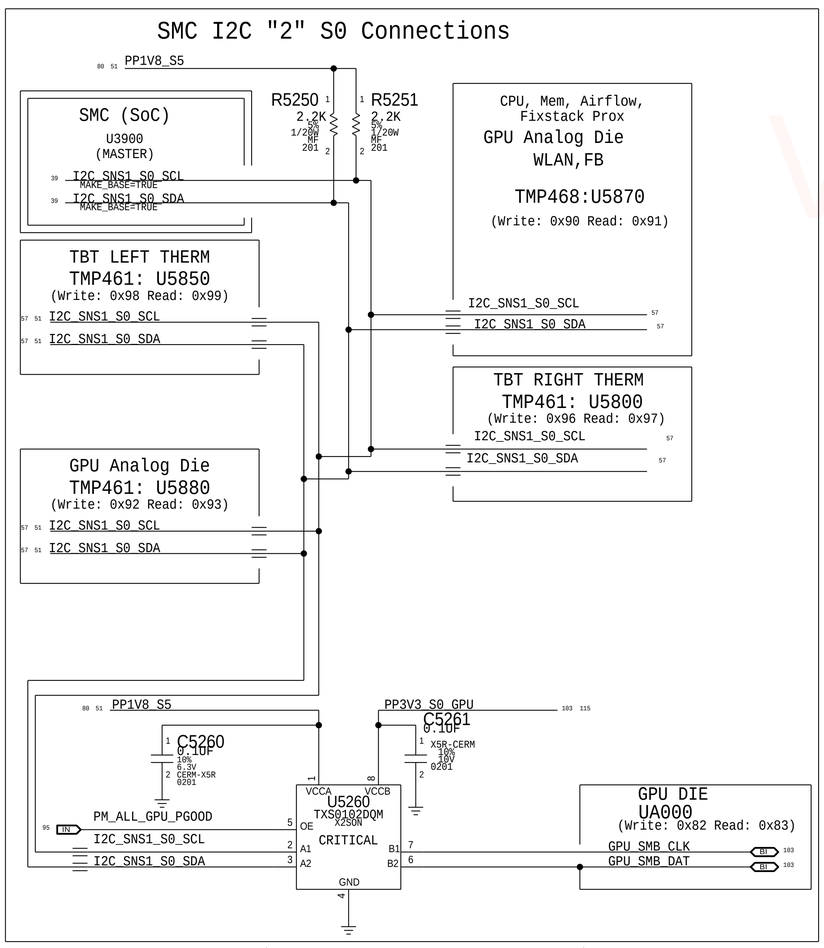

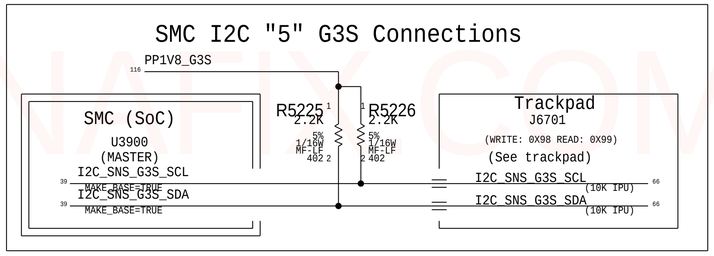

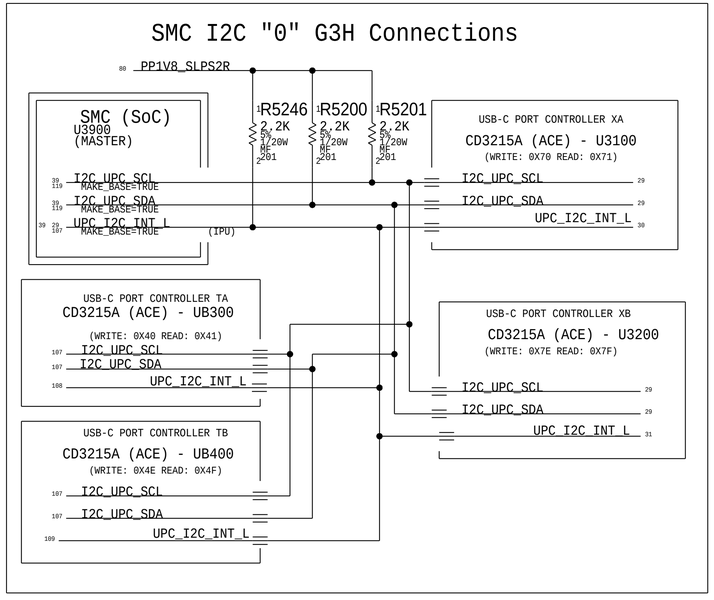

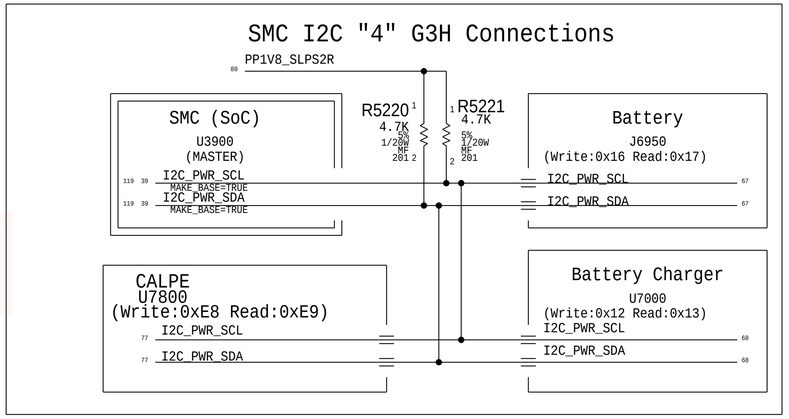

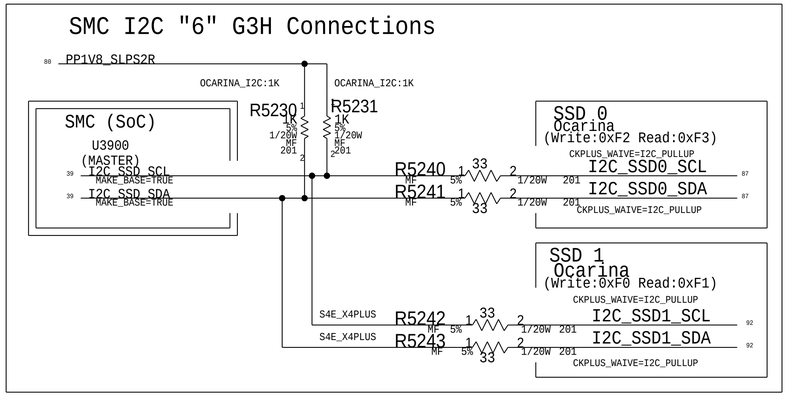

BOM_COST_GROUP=SMC

PAGE TITLE

I2C Connections 1

Apple Inc.

DRAWING NUMBER	051-02643
SIZE	D
REVISION	4.0.0
BRANCH	evt-0
PAGE	52 OF 200
SHEET	51 OF 131

NOTICE OF PROPRIETARY PROPERTY:
THE INFORMATION CONTAINED HEREIN IS THE PROPRIETARY PROPERTY OF APPLE INC.
THE POSESSOR AGREES TO THE FOLLOWING:
I TO MAINTAIN THIS DOCUMENT IN CONFIDENCE
II NOT TO REPRODUCE OR COPY IT
III NOT TO REVEAL OR PUBLISH IT IN WHOLE OR PART
IV ALL RIGHTS RESERVED

AP I2C "0" G3S Connections

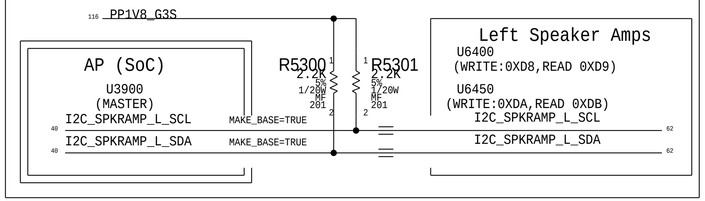

AP I2C "1" G3S Connections

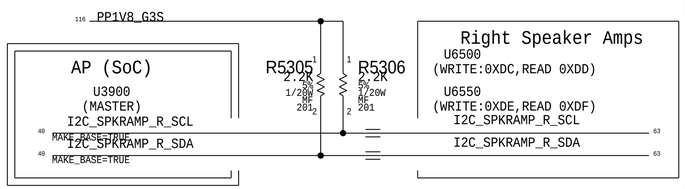

AP I2C "2" Codec Connections

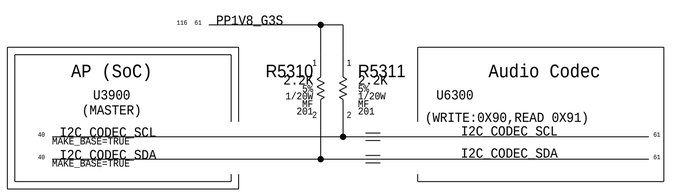

AP I2C "3" G3S Connections

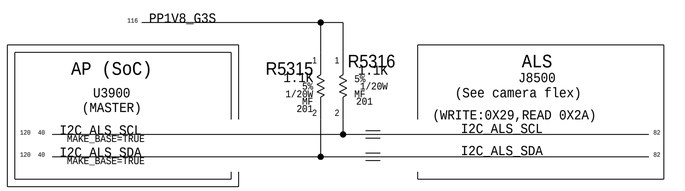

AP I2C "4" DFR Connections

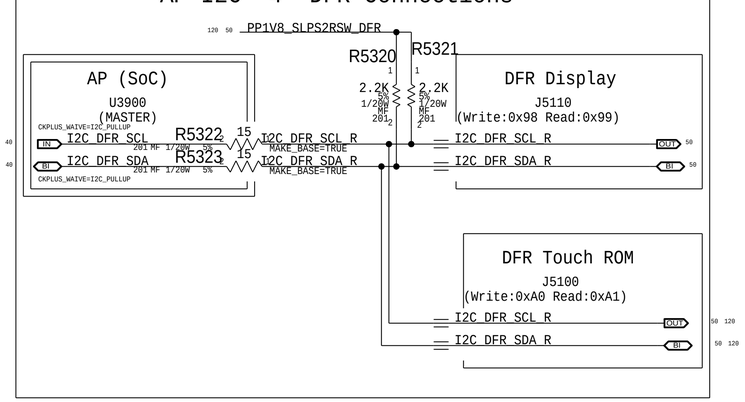

AP I2C "5" Awake Connections

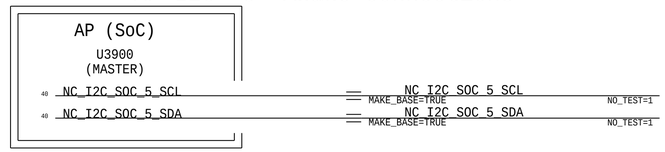

ISP I2C "1" G3S Connections

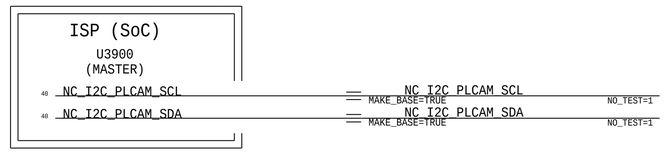

ISP I2C "0" G3S Connections

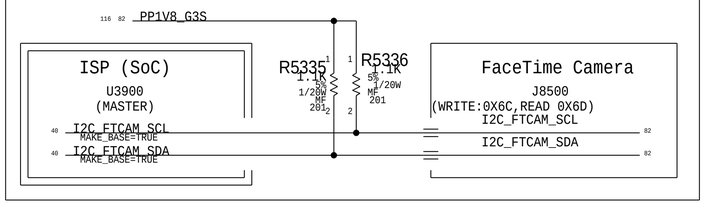

CNL-H uSFF SMBUS Connections

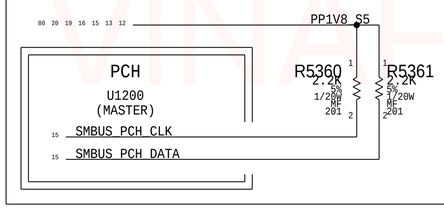

I2C Device Address

Device	SMC IF	ADDR. (8b)
ACE XA	I2C0	0X70/1
ACE XB	I2C0	0X7E/F
ACE TA	I2C0	0X40/1
ACE TB	I2C0	0X4E/F
EADC1	I2C1	0X10/1
EADC2	I2C1	0X12/3
Temp. Sensor Left	I2C2	0X98/9
Temp. Sensor Right	I2C2	0X96/7
CPU,MEM,WLAN Thermal	I2C2	0X90/1
GPU Analog Die Thermal	I2C2	0X92/3
GPU Digital Die Thermal	I2C2	0X82/3
TCON	I2C3	0X20-3F
GMUX IOEXP	I2C3	0X44/5
Charger	I2C4	0X12/3
Battery	I2C4	0X16/7
Calpe	I2C4	0XE8/9
Trackpad	I2C5	0X98/9
SSD0	I2C6	0XF2/3
SSD1	I2C6	0XF0/1
SoC IF		
Left Spkr Amp.(U6400)	I2C0	0XD8/9
Left Spkr Amp.(U6450)	I2C0	0XDA/B
Right Spkr Amp.(U6500)	I2C1	0XDC/D
Right Spkr Amp.(U6550)	I2C1	0XDE/F
Audio Codec	I2C2	0X90/1
ALS	I2C3	0X29/A
DFR Display	I2C4	0X98/9
DFR Touch	I2C4	0XA0/1
NC.	I2C5	
NC. Spkr ID1	I2C6_SDA	
Spkr ID0	I2C6_SCL	
ISP IF		
FT Camera	I2C0	0X6C/D
NC.	I2C1	
AOP IF		
NC.	I2C0	
PCH IF		
NC.	PULL-UP	

BOM_COST_GROUP=SMC

PAGE TITLE
I2C Connections 2

Apple Inc.

DRAWING NUMBER 051-02643
SIZE D
REVISION 4.0.0
BRANCH evt-0
PAGE 53 OF 200
SHEET 52 OF 131

NOTICE OF PROPRIETARY PROPERTY:
THE INFORMATION CONTAINED HEREIN IS THE PROPRIETARY PROPERTY OF APPLE INC.
THE POSESSOR AGREES TO THE FOLLOWING:
I TO MAINTAIN THIS DOCUMENT IN CONFIDENCE
II NOT TO REPRODUCE OR COPY IT
III NOT TO REVEAL OR PUBLISH IT IN WHOLE OR PART
IV ALL RIGHTS RESERVED

VINAFIX.COM

DC-IN Voltage Sense (VD0R)

Gain: 0.05322x
Vnominal: 20 V, Range: 23.49 V
SMC ADC: 00
Enables DC-In VSense divider when AC present.
2.2KHz

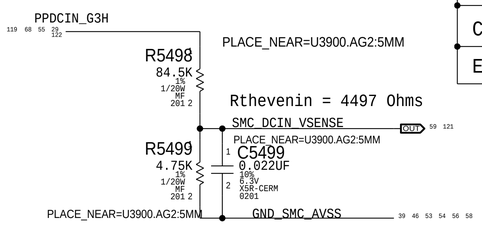

J680 SENSOR SETTINGS

CHIP	Vref(V)	Vmax	SMC sample Freq.	ADR RC filter
H9M	1.25	1.8	10khz	0.1ms
CALPE	1.5	5	100hz	10ms
EADC	2.5	5	1-2hz(10hz)	100ms

OTHER 5V High Side Current Sense (IO5R)

Gain: 200x, EDP: 1.766 A
Rsense: 0.005 (R5410) or Rsense SHORT
Vsense: 8.83 mV, Range: 3.3 A
CALPE: AMUX_B7

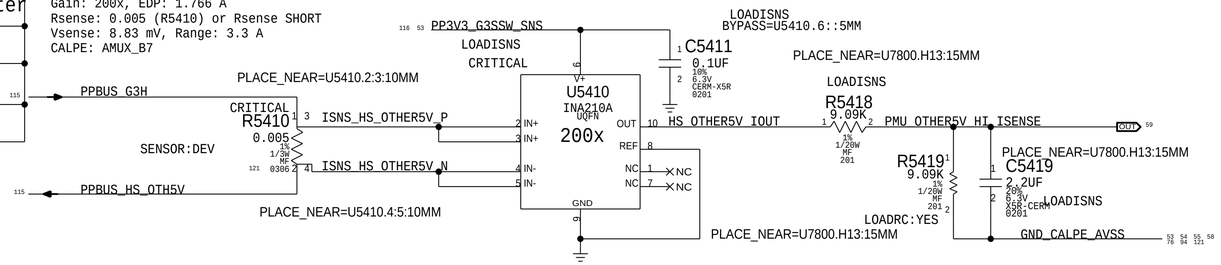

DC-IN Current Sense (ID0R)

DISCharger Gain: 20x, EDP: 4.6 A
Rsense: 0.010 (R7020)
SMC ADC: 01

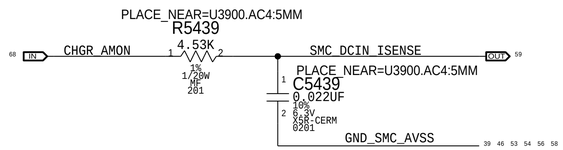

LEFT SIDE 3.3V High Side Current Sense (IOLR)

Gain: 200x, EDP: 4.82 A
Rsense: 0.003 (R5440) or Rsense SHORT
Vsense: 14.46 mV, Range: 5.5 A
SMC ADC:TBD
CALPE: AMUX_B5

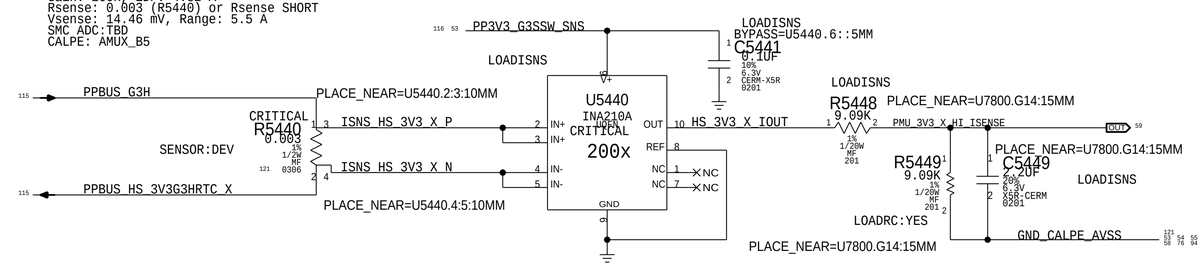

PBUS Voltage Sense (VP0R)

Gain: 0.08513x
Vnominal: 13.1 V, Range: 14.68 V
SMC ADC: 02
Enables PBUS VSense divider when in S0.

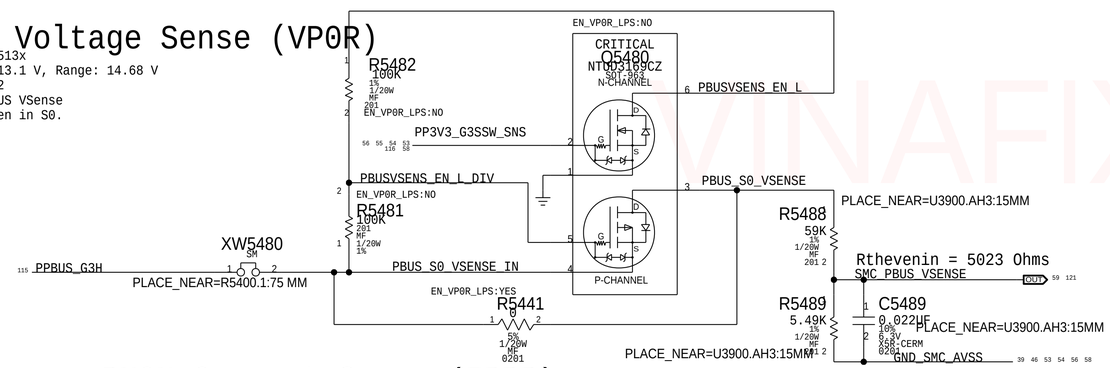

RIGHT SIDE 3.3V High Side Current Sense (IORR)

Gain: 100x, EDP: 10.6 A
Rsense: 0.003 (R5460) or Rsense SHORT
Vsense: 31.8 mV, Range: 11 A
SMC ADC:TBD
CALPE: AMUX_B6

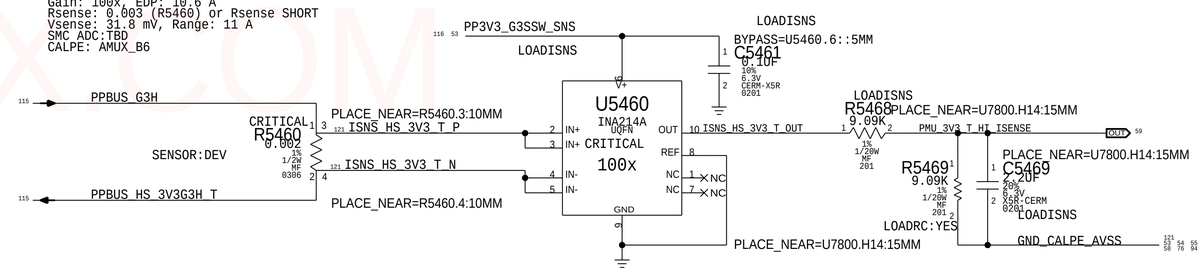

Discharger BMON Current Sense (IPBR)

Charger Gain: 8X OR 64x, Use 8X, EDP: 25 A
Rsense: 0.005 (R7060)
SMC ADC: 03

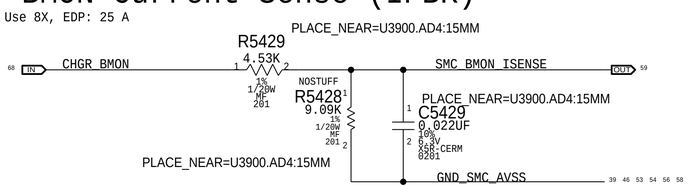

LCD Backlight Current Sense (IBLR)

Gain: 100x. EDP: 0.87 A
Rsense: 0.025 (R8400)
Vsense: 21.75 mV, Range: 1.32 A
EADC1: CH0

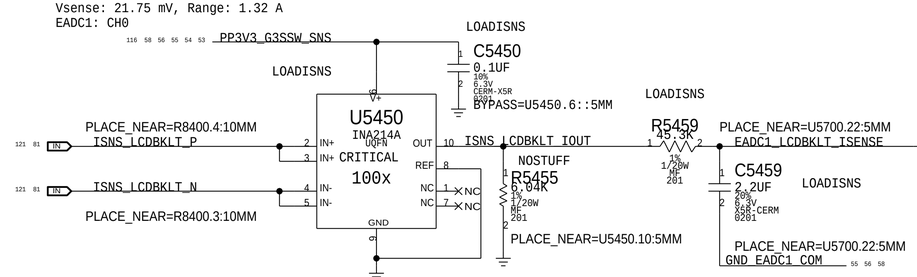

CPU High Side Curent Sense (IC0R)

Gain: 100x, EDP: 16.8 A
Rsense: 0.001 (R5400)
Vsense: 16.8 mV, Range: 25 A
SMC ADC: 04
3.3KHz

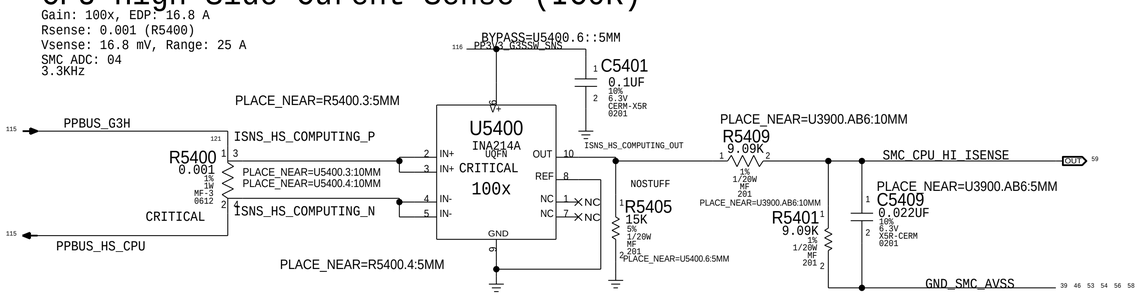

PART NUMBER	QTY	DESCRIPTION	REFERENCE DES	CRITICAL	BOM OPTION
117S0008	3	RES,MTL FLIM,100K,1/16W,0201,SMD,LF	R5449,R5469,R5419		LOADRC:NO

BOM_COST_GROUP=SENSORS

PAGE TITLE
Power Sensors High Side

Apple Inc.

NOTICE OF PROPRIETARY PROPERTY:
THE INFORMATION CONTAINED HEREIN IS THE PROPRIETARY PROPERTY OF APPLE INC.
THE POSESSOR AGREES TO THE FOLLOWING:
I TO MAINTAIN THIS DOCUMENT IN CONFIDENCE
II NOT TO REPRODUCE OR COPY IT
III NOT TO REVEAL OR PUBLISH IT IN WHOLE OR PART
IV ALL RIGHTS RESERVED

DRAWING NUMBER 051-02643
SIZE D
REVISION 4.0.0
BRANCH evt-0
PAGE 54 OF 200
SHEET 53 OF 131

WINAFIX.COM

PCH 1.0V Current Sense (IS1C)

Gain: 200x, EDP: 4.7 A
Rsense: 0.001 (R5560) or XWTBD
Vsense: 14.1 mV, Range: 5.5 A
EADC2:CH1

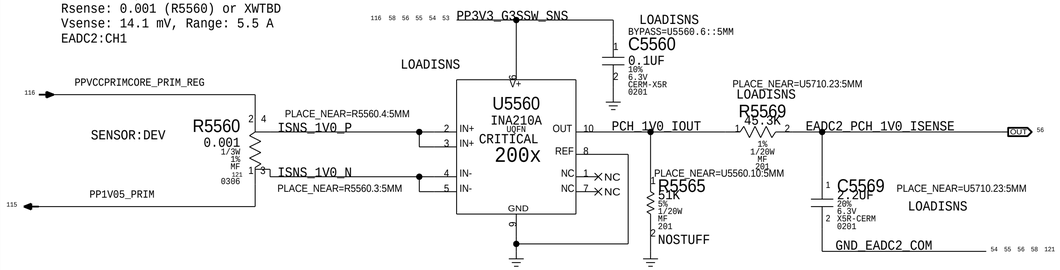

CPU Core Curent Sense (ICAC)

Gain: 89.48x, EDP: 128 A
Rsense: 3x of 0.00075
R7210,R7220,R7230),Rsum: 0.00025
Vsense:16.75 mV, Range: 134.11 A
CALPE AMUX: A0

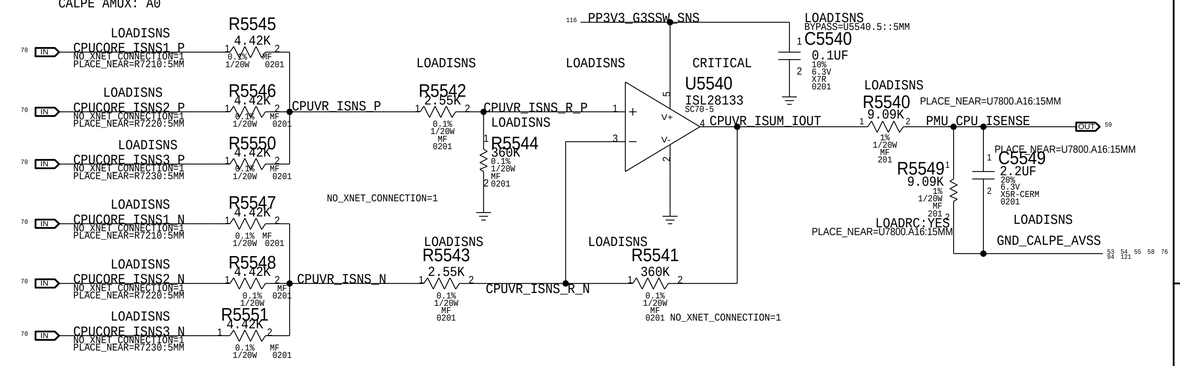

DDR4 1.2V Current Sense (IM0C)

Gain: 100x, EDP: 11 A
Rsense: 0.002 (R7718) or XWTBD
Vsense: 22.2 mV, Range: 16.5 A
CALPE: AMUX_A7

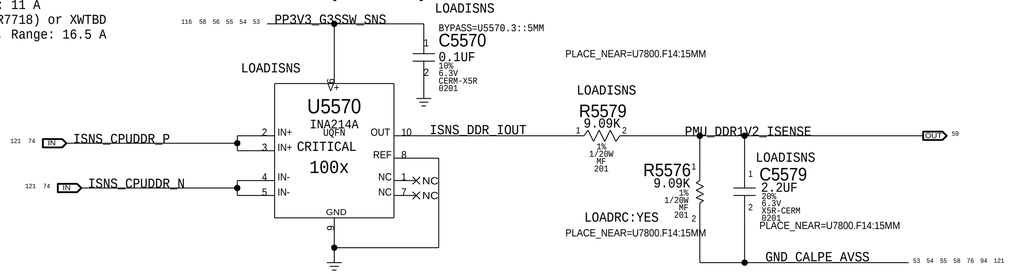

WLANBT 3V3 Current Sense (IAPC)

Gain: 200x, EDP: 1.5 A
Rsense: 0.005 (R5530) or Rsense SHORT
Vsense: 7.5 mV, Range: 1.72 A
SMC: ADC 06

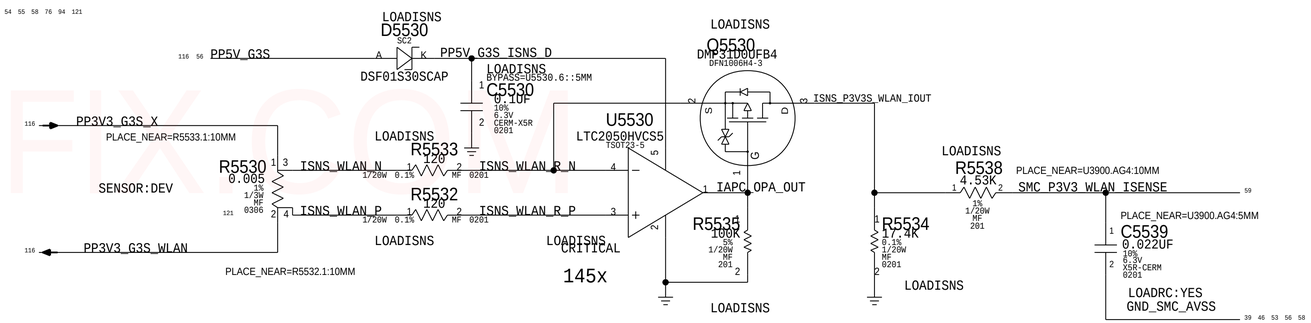

CPUDDR 1.2V Curent Sense (IMCC)

Gain: 200x, EDP: 2.8 A
Rsense: 0.005 (R5510)
Vsense: 14 mV, Range: 3 A
CALPE: AMUX_A6

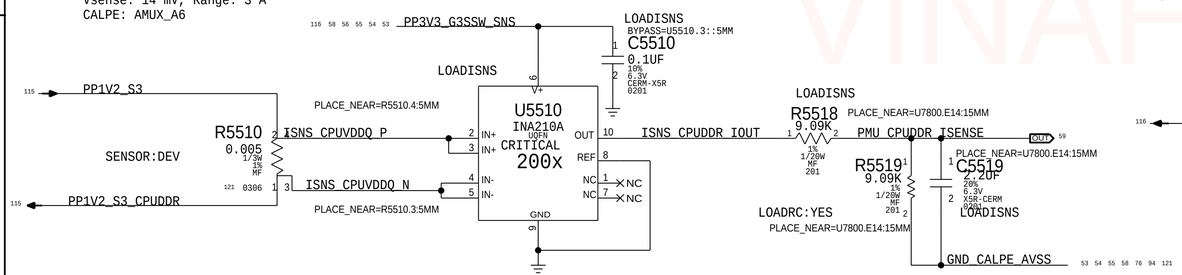

WLANBT 1V8 Current Sense (IA8C)

Gain: 200x, EDP: 0.1 A
Rsense: 0.05 (R5520) or Rsense SHORT
Vsense: 5 mV, Range: 0.3 A
CALPE: AMUX_A5

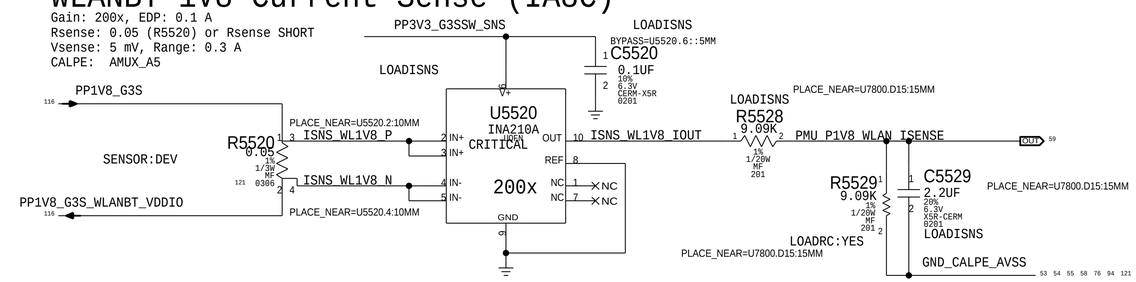

2.5V Current Sense (IM1C)

Gain: 200x, EDP: 2.24 A
Rsense: 0.005 (R7724) or Rsense SHORT
Vsense: 11.2 mV, Range: 3.3 A
EADC2: CH0

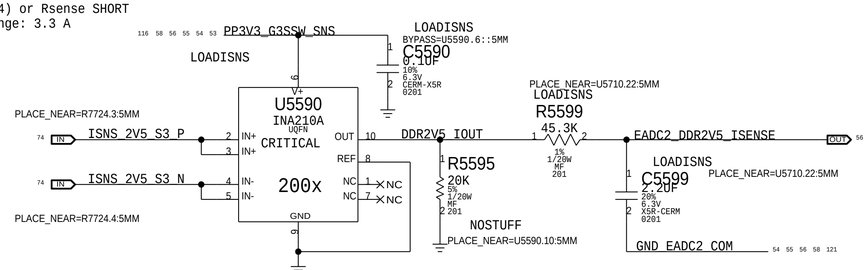

PART NUMBER	QTY	DESCRIPTION	REFERENCE DES	CRITICAL	BOM OPTION
117S0008	5	RES,MTL FLIM,100K,1/16W,0201,SMD,LF	R5576,R5519,R5549,C5539,R5529		LOADRC:NO

BOM_COST_GROUP=SENSORS

PAGE TITLE: Power Sensors Load Side

Apple Inc.

DRAWING NUMBER: 051-02643 SIZE: D
REVISION: 4.0.0
BRANCH: evt-0
PAGE: 55 OF 200
SHEET: 54 OF 131

NOTICE OF PROPRIETARY PROPERTY:
THE INFORMATION CONTAINED HEREIN IS THE PROPRIETARY PROPERTY OF APPLE INC.
THE POSESSOR AGREES TO THE FOLLOWING:
I TO MAINTAIN THIS DOCUMENT IN CONFIDENCE
II NOT TO REPRODUCE OR COPY IT
III NOT TO REVEAL OR PUBLISH IT IN WHOLE OR PART
IV ALL RIGHTS RESERVED

VINAFIX.COM

PP3V3_G3W_SSD0 HIGH SIDE CURRENT SENSE (KEY IH0C)

GAIN: 200X, EDP: 1.48 A
RSENSE: 0.005 (RK710) OR RSENSE SHORT
VSENSE: 13 MV, RANGE: 2.5 A
CALPE: AMUX_B3

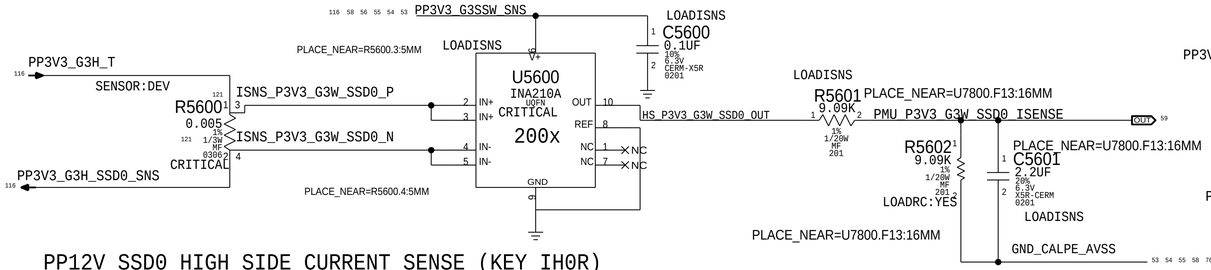

PP3V3_G3W_SSD1 HIGH SIDE CURRENT SENSE (KEY IH1C)

GAIN: 200X, EDP: 1.48 A
RSENSE: 0.005 (RK760) OR RSENSE SHORT
VSENSE: 13 MV, RANGE: 2.5 A
CALPE: AMUX_B4

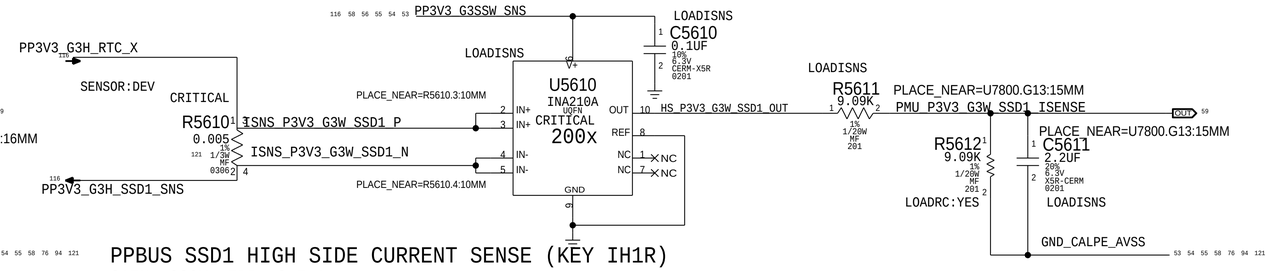

PP12V SSD0 HIGH SIDE CURRENT SENSE (KEY IH0R)

GAIN: 200X, EDP: 0.5 A
RSENSE: 0.005 (RK610) OR RSENSE SHORT
VSENSE: 13 MV, RANGE: 2.5 A
CALPE: AMUX_B1

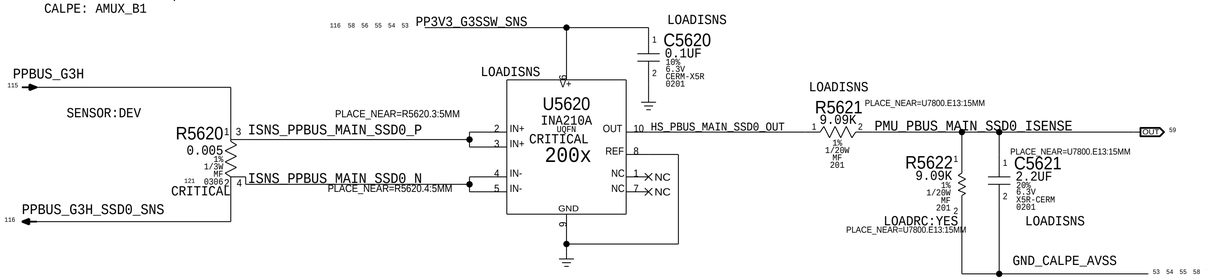

PPBUS SSD1 HIGH SIDE CURRENT SENSE (KEY IH1R)

GAIN: 200X, EDP: 0.5 A
RSENSE: 0.005 (R5607) OR RSENSE SHORT
VSENSE: 13 MV, RANGE: 2.5 A
CALPE: AMUX_B2

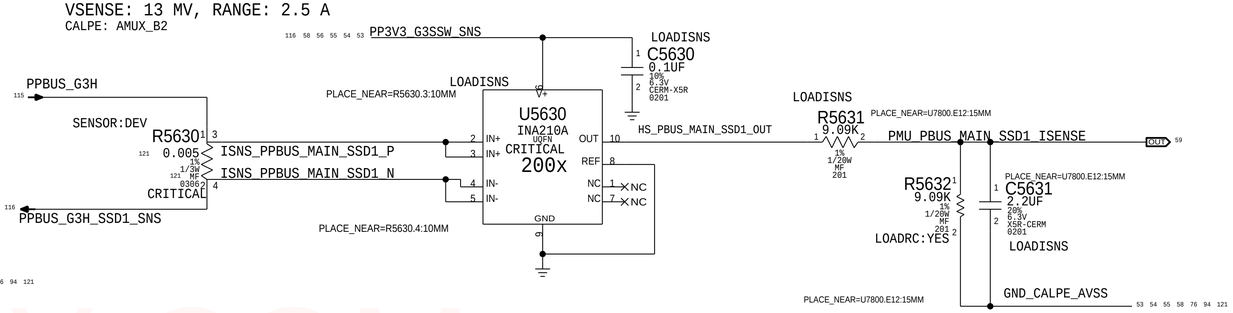

LCD Panel Current Sense (ILDC)

Gain: 200x. EDP: 1 A
RSENSE: 0.01 (R8520) or Rsense SHORT
Vsense: 5 mV, Range: 1.25 A
EADC1: CH1

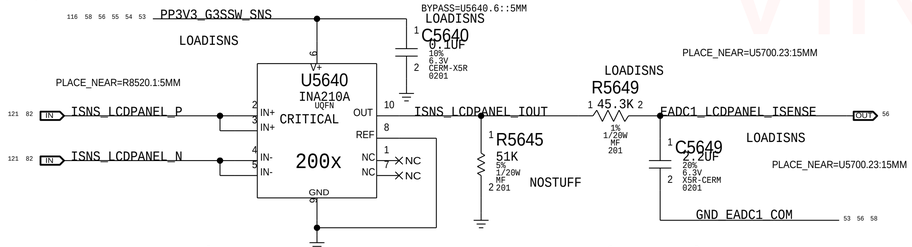

T139 Current Sense (IF3C)

Gain: 200x, EDP: 0.06 A
Rsense: 0.05 (R5660) or Rsense SHORT
Vsense: 3 mV, Range: 0.25 A
EADC2: CH7

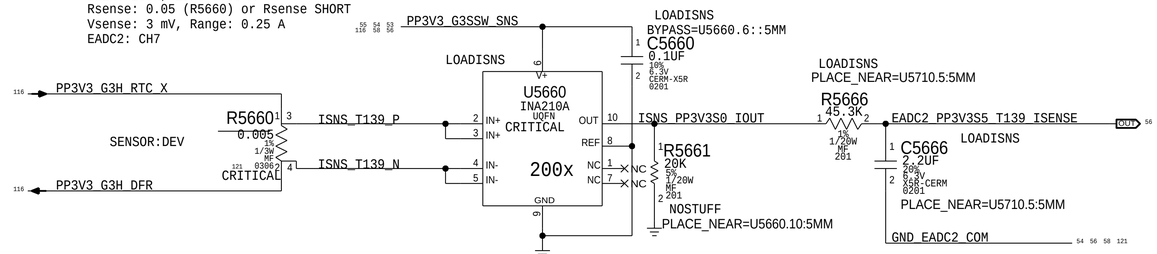

Battery BMON Discrete Current Sense (IP0R)

Gain: 11.82x, EDP: 24 A
Rsense: 0.005 (R7060)
Vsense: 120 mV, Range: 25.37 A
CALPE: AMUX_B0

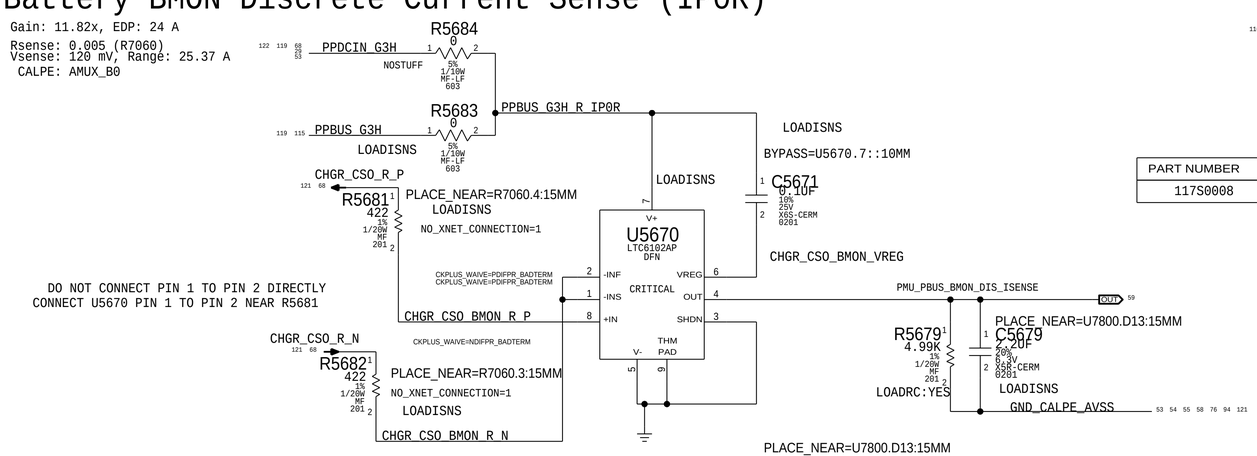

DO NOT CONNECT PIN 1 TO PIN 2 DIRECTLY
CONNECT U5670 PIN 1 TO PIN 2 NEAR R5681

PART NUMBER	QTY	DESCRIPTION	REFERENCE DES	CRITICAL	BOM OPTION
117S0008	5	RES,MTL FLIM,100K,1/16W,0201,SMD,LF	R5602,R5612,R5622,R5632,R5679		LOADRC:NO

BOM_COST_GROUP=SENSORS

PAGE TITLE: Power Sensors Extended 1

Apple Inc.

DRAWING NUMBER: 051-02643 SIZE: D
REVISION: 4.0.0
BRANCH: evt-0
PAGE: 56 OF 200
SHEET: 55 OF 131

NOTICE OF PROPRIETARY PROPERTY:
THE INFORMATION CONTAINED HEREIN IS THE PROPRIETARY PROPERTY OF APPLE INC.
THE POSESSOR AGREES TO THE FOLLOWING:
I TO MAINTAIN THIS DOCUMENT IN CONFIDENCE
II NOT TO REPRODUCE OR COPY IT
III NOT TO REVEAL OR PUBLISH IT IN WHOLE OR PART
IV ALL RIGHTS RESERVED

VINAFIX.COM

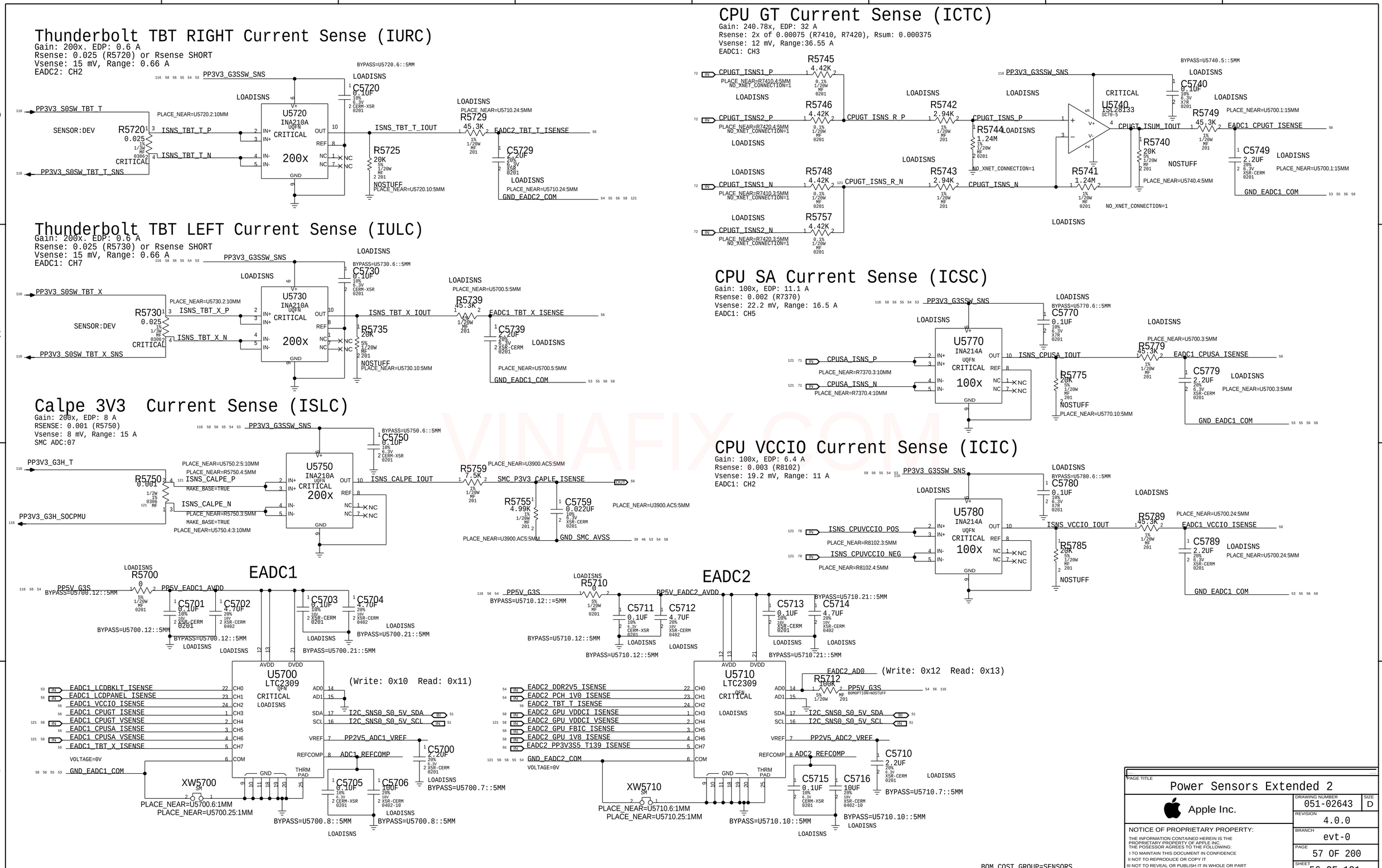

VINAFIX.COM

PAGE TITLE
Power Sensors Extended 2

Apple Inc.

DRAWING NUMBER 051-02643 SIZE D
REVISION 4.0.0
BRANCH evt-0
PAGE 57 OF 200
SHEET 56 OF 131

NOTICE OF PROPRIETARY PROPERTY:
THE INFORMATION CONTAINED HEREIN IS THE PROPRIETARY PROPERTY OF APPLE INC.
THE POSESSOR AGREES TO THE FOLLOWING:
I TO MAINTAIN THIS DOCUMENT IN CONFIDENCE
II NOT TO REPRODUCE OR COPY IT
III NOT TO REVEAL OR PUBLISH IT IN WHOLE OR PART
IV ALL RIGHTS RESERVED

THERMAL DIODE: VRAM PROXIMITY (KEY)

Place Q5877 Bottom,underVRAM shiled can, but not within 2mm of any IC

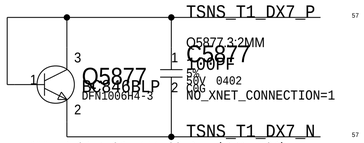

THERMAL DIODE: GPU ANALOG DIE (KEY TA0P)

Connect GPU Analog Die to U5870 channel 8

GPU Digital DIE TG0D:

U5880 I2C Address:TMP461 A0->Floating A1->GND 0X92/0X93

Thermal Sensor A:

Thunderbolt Die, Airflow Left

U5850 I2C Address:TMP461 A1->Floating A0->Floating 0X98/0X99

Thermal Diode: TBT Die (TTLD)

Placement Note:
The P leg connects to THERMDA pin of the TBT chip, the N leg connect to pin AC22.

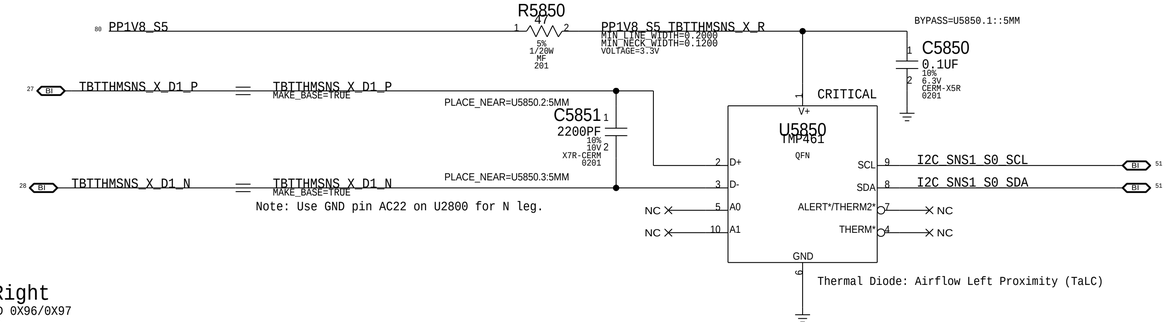

Note: Use GND pin AC22 on U2800 for N leg.

Thermal Diode: Airflow Left Proximity (TaLC)

Placement Note:
Place U5850 on the TOP side, on the left portion of the board, 1" to the right of USB connector.

Thermal Sensor C:

Thunderbolt Die, Air Flow Right

U5800 I2C Address:TMP461 A1->Floating A0->GND 0X96/0X97

Thermal Diode: TBT Die (TTRD)

Placement Note:
The P leg connects to THERMDA pin of the TBT chip, the N leg connect to pin AC22.

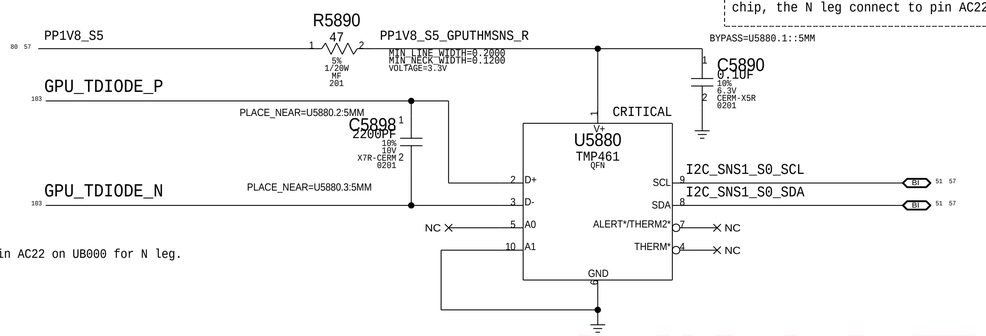

Note: Use GND pin AC22 on UB000 for N leg.

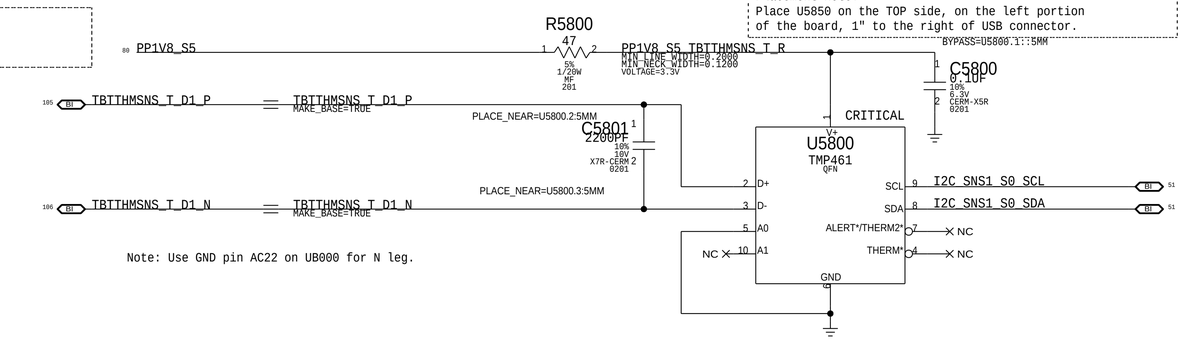

Note: Use GND pin AC22 on UB000 for N leg.

Thermal Diode: Airflow Right Proximity (TaRC)

Placement Note:
Place U5800 on the TOP side, on the left portion of the board, 1" to the right of USB connector.

THERMAL DIODE: CPU PROX (KEY TC0P)

Placement Note:
Place Q5871 under the CPU ON BOTTOM SIDE

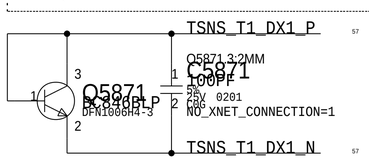

THERMAL DIODE: FIN STACK LEFT (KEY TH2H)

Placement Note:
Place Q5872,AIRFLOW THERMAL INDICATOR,ABOVETHE X100, ON THE TOP SIDE

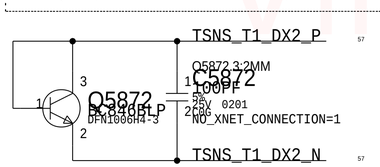

THERMAL DIODE: FIN STACK RIGHT (KEY TH1H)

Placement Note:
Place Q5873 AT THE CORNER NEAR RIGHT FAN, ON THE TOP SIDE

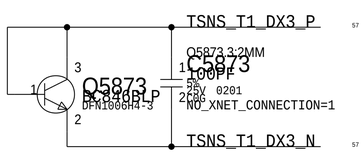

THERMAL DIODE: Memory Proximity (KEY TM0P)

Place Q5874 between two rows of Memory devices, between channel A and CHANNEHL b PN BOTTOM SIDES

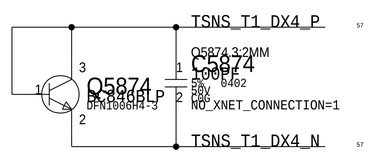

THERMAL DIODE: X100 PROXIMITY (KEY TW0P)

Place Q5875 near X100 on bottom

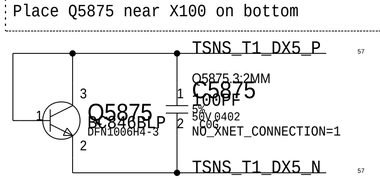

THERMAL DIODE: GPU PROXIMITY(KEY)

Place Q5876 near GPU, Top side

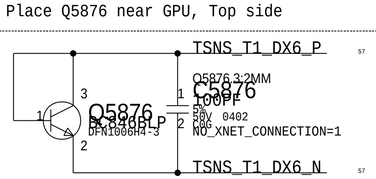

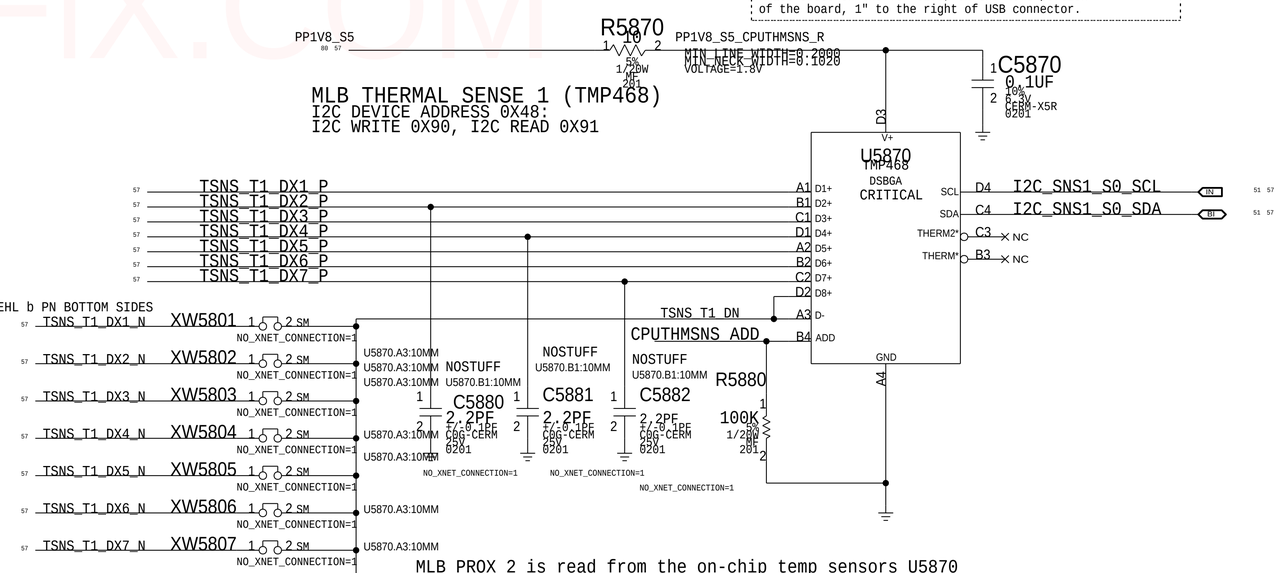

MLB PROX 2 is read from the on-chip temp sensors U5870

Place U5870 near Calpe (U7800)

BOM_COST_GROUP=SENSORS

PAGE TITLE	Thermal Sensors
Apple Inc.	DRAWING NUMBER 051-02643 SIZE D
	REVISION 4.0.0
NOTICE OF PROPRIETARY PROPERTY: THE INFORMATION CONTAINED HEREIN IS THE PROPRIETARY PROPERTY OF APPLE INC. THE POSESSOR AGREES TO THE FOLLOWING: I TO MAINTAIN THIS DOCUMENT IN CONFIDENCE II NOT TO REPRODUCE OR COPY IT III NOT TO REVEAL OR PUBLISH IT IN WHOLE OR PART IV ALL RIGHTS RESERVED	BRANCH evt-0
	PAGE 58 OF 200
	SHEET 57 OF 131

IFIXIT.COM

GPU SENSORS

CPU Core Voltage Sense (VCAC)

CALPE : AMUX-A1

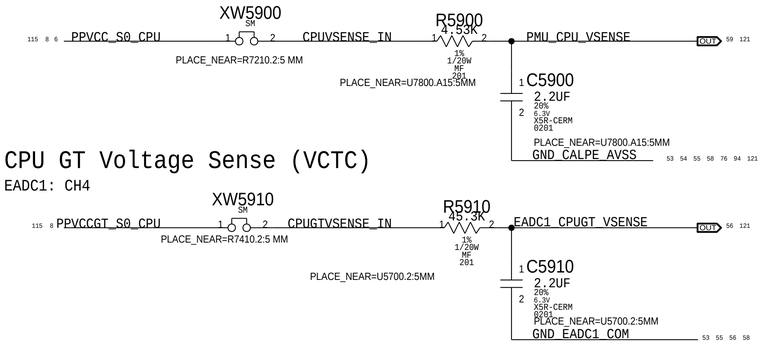

CPU GT Voltage Sense (VCTC)

EADC1: CH4

CPU SA Voltage Sense (VCSC)

EADC1: CH6

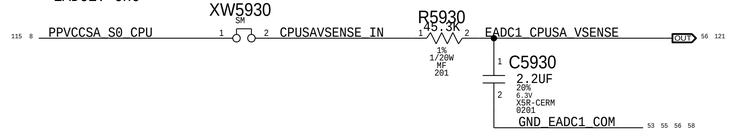

GPU CORE Voltage Sense (VG0C)

CALPE: AMUX-A3

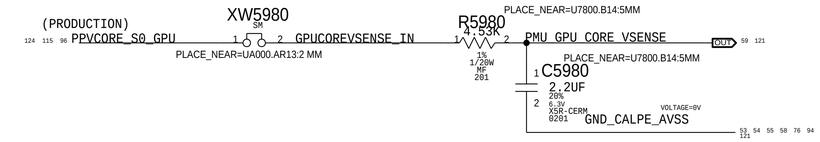

GPU VDDCI Voltage Sense (VG2C)

EADC2: CH4

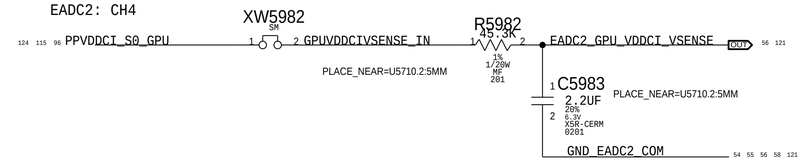

GPU CORE Current Sense (IG0C)

no longer lives on this page
it's merged with the PCC circuit
on CSA 99

Gain: 154.87x, EDP: 78 A
Rsense: 3X OF 0.00075 (RA651,RA641,RA346)
Vsense: 19.5 mV, Range: 109 A
CALPE : AMUX A2

GPU FB Current Sense (IG1C)

Gain: 100x, EDP: 13 A
Rsense: 0.002 (RA300)
Vsense: 26 mV, Range: 18.7 A
CALPE : AMUX A4

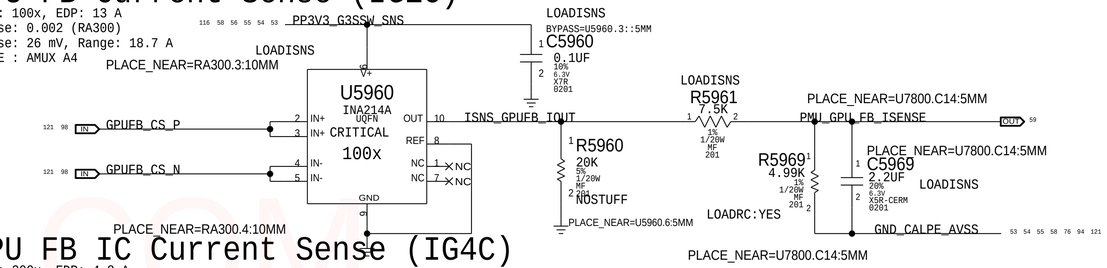

GPU FB IC Current Sense (IG4C)

Gain: 200x, EDP: 4.8 A
Rsense: 0.005 (R5970)
Vsense: 10 mV, Range: 3 A
EADC2: CH5

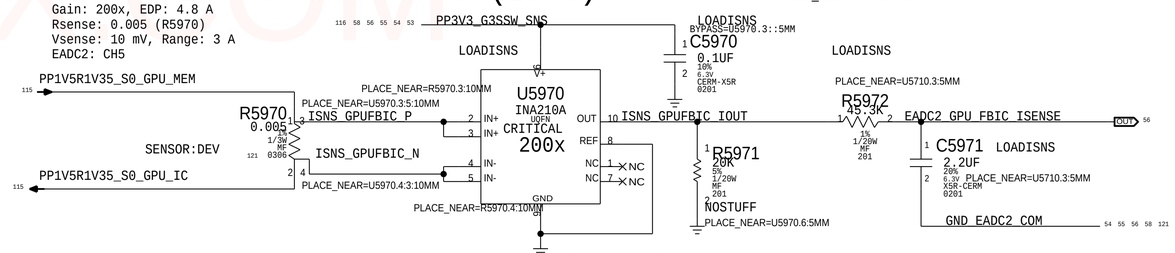

GPU VDDCI Current Sense (IG2C)

Gain: 100x, EDP: 10 A
Rsense: 0.003 (RA368)
Vsense: 20 mV, Range: 16.5 A
EADC2: CH3

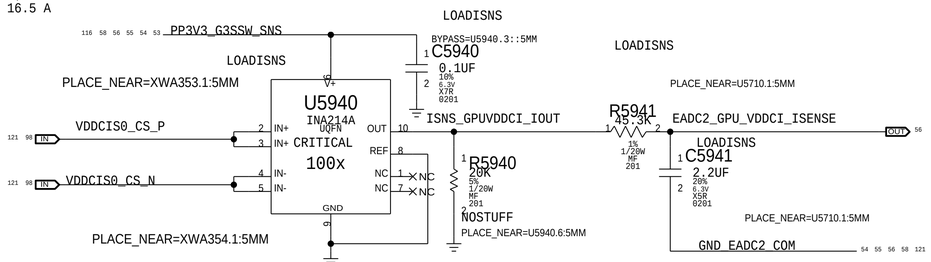

GPU HIGH SIDE Current Sense (IG0R)

Gain: 200x, EDP: 4 A
Rsense: 0.002 (R5990) or Rsense SHORT
Vsense: 8 mV, Range: 7.82 A
SMC ADC: 05

(PRODUCTION)

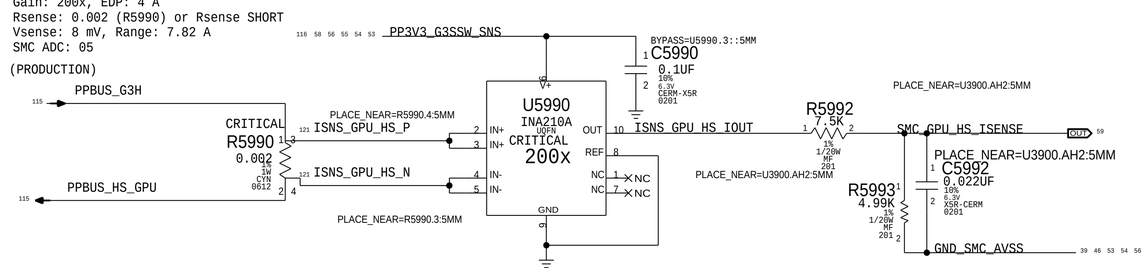

GPU 1V8 Current Sense (IG3C)

Gain: 200x, EDP: 1.5 A
Rsense: 0.005 (R5950)
Vsense: 7.5 mV, Range: 3 A
EADC2: CH6

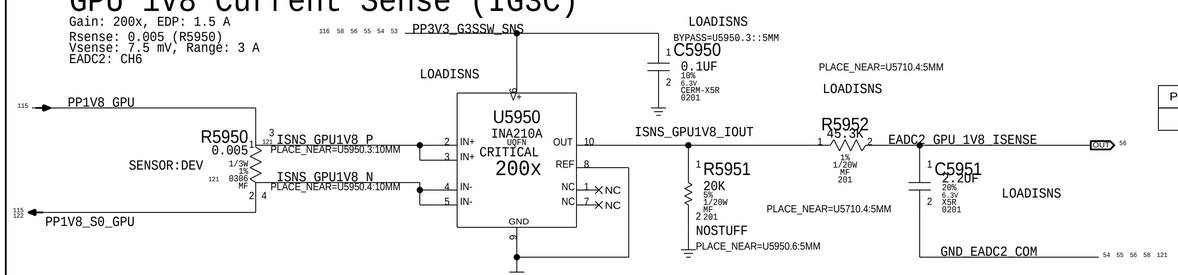

PART NUMBER	QTY	DESCRIPTION	REFERENCE DES	CRITICAL	BOM OPTION
117S0008	1	RES,MTL FLIM,100K,1/16W,0201,SMD,LF	R5969		LOADRC:NO

BOM_COST_GROUP=SENSORS

PAGE TITLE
Power Sensor Extended 3

Apple Inc.

DRAWING NUMBER 051-02643 SIZE D
REVISION 4.0.0
BRANCH evt-0
PAGE 59 OF 200
SHEET 58 OF 131

NOTICE OF PROPRIETARY PROPERTY:
THE INFORMATION CONTAINED HEREIN IS THE PROPRIETARY PROPERTY OF APPLE INC.
THE POSESSOR AGREES TO THE FOLLOWING:
I TO MAINTAIN THIS DOCUMENT IN CONFIDENCE
II NOT TO REPRODUCE OR COPY IT
III NOT TO REVEAL OR PUBLISH IT IN WHOLE OR PART
IV ALL RIGHTS RESERVED

VINAFIX.COM

FAN CONNECTOR

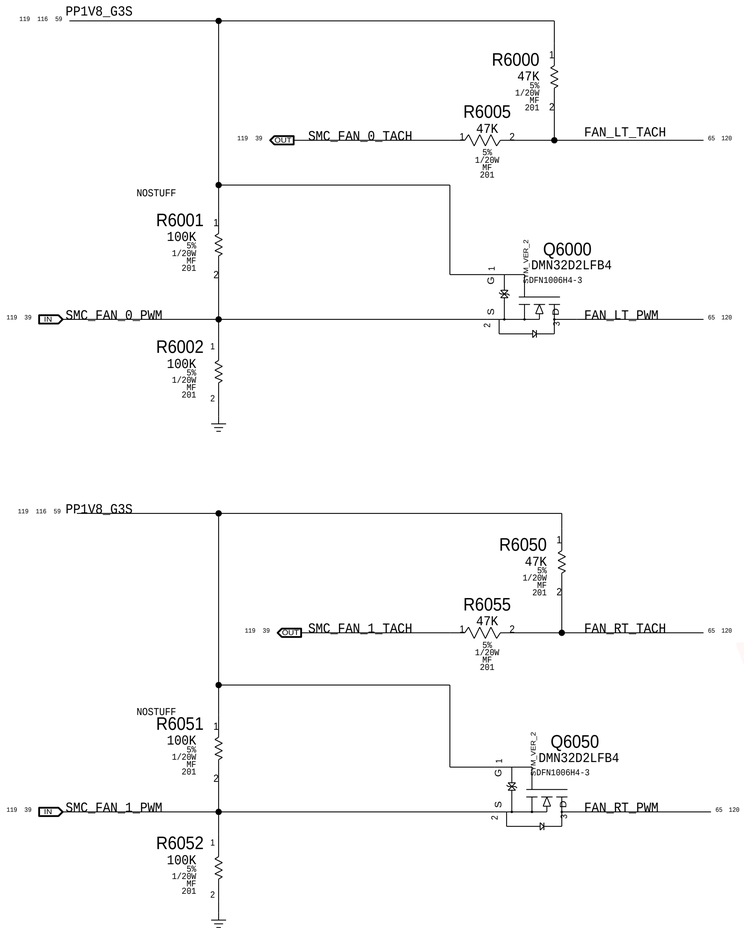

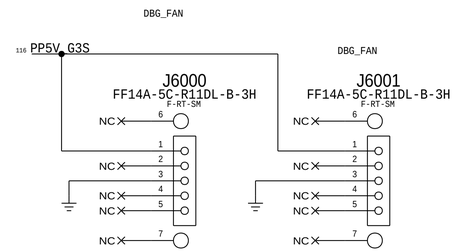

H9M SMC ADC Assignments

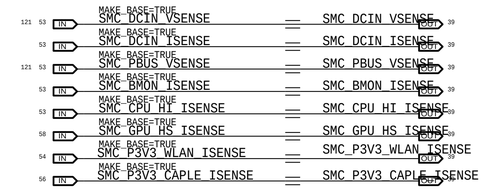

CALPE AMUX Assignments

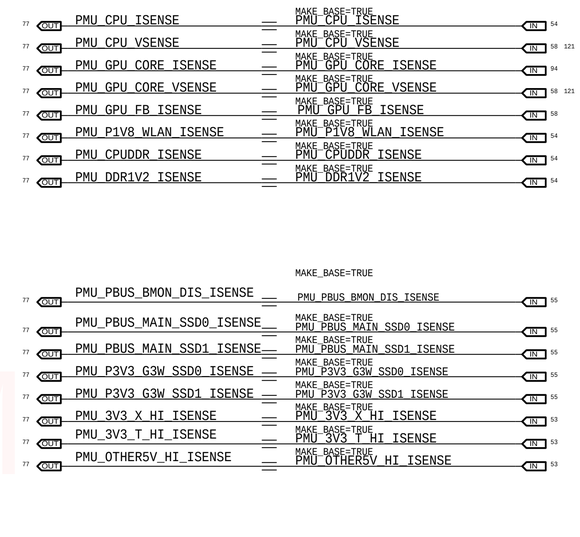

VINAFIX.COM

BOM_COST_GROUP=FAN

PAGE TITLE
Fans/SMC/AMUX Support

Apple Inc.

DRAWING NUMBER 051-02643
SIZE D
REVISION 4.0.0
BRANCH evt-0
PAGE 60 OF 200
SHEET 59 OF 131

NOTICE OF PROPRIETARY PROPERTY:
THE INFORMATION CONTAINED HEREIN IS THE PROPRIETARY PROPERTY OF APPLE INC.
THE POSESSOR AGREES TO THE FOLLOWING:
I TO MAINTAIN THIS DOCUMENT IN CONFIDENCE
II NOT TO REPRODUCE OR COPY IT
III NOT TO REVEAL OR PUBLISH IT IN WHOLE OR PART
IV ALL RIGHTS RESERVED

VINAFIX.COM

BOM_COST_GROUP=AUDIO

DESIGN: X502/DEV_MLB_U
LAST CHANGE: Wed Feb 18 17:12:24 2015

PAGE TITLE
Audio Placeholder

Apple Inc.

DRAWING NUMBER 051-02643
SIZE D
REVISION 4.0.0
BRANCH evt-0
PAGE 62 OF 200
SHEET 60 OF 131

NOTICE OF PROPRIETARY PROPERTY:
THE INFORMATION CONTAINED HEREIN IS THE PROPRIETARY PROPERTY OF APPLE INC.
THE POSESSOR AGREES TO THE FOLLOWING:
I TO MAINTAIN THIS DOCUMENT IN CONFIDENCE
II NOT TO REPRODUCE OR COPY IT
III NOT TO REVEAL OR PUBLISH IT IN WHOLE OR PART
IV ALL RIGHTS RESERVED

AUDIO JACK CODEC I2C ADDRESS		
AD1	AD0	ADDRESS
GND	GND	0x48 <--
GND	1.8V	0x49
1.8V	GND	0x4A
1.8V	1.8V	0x4B

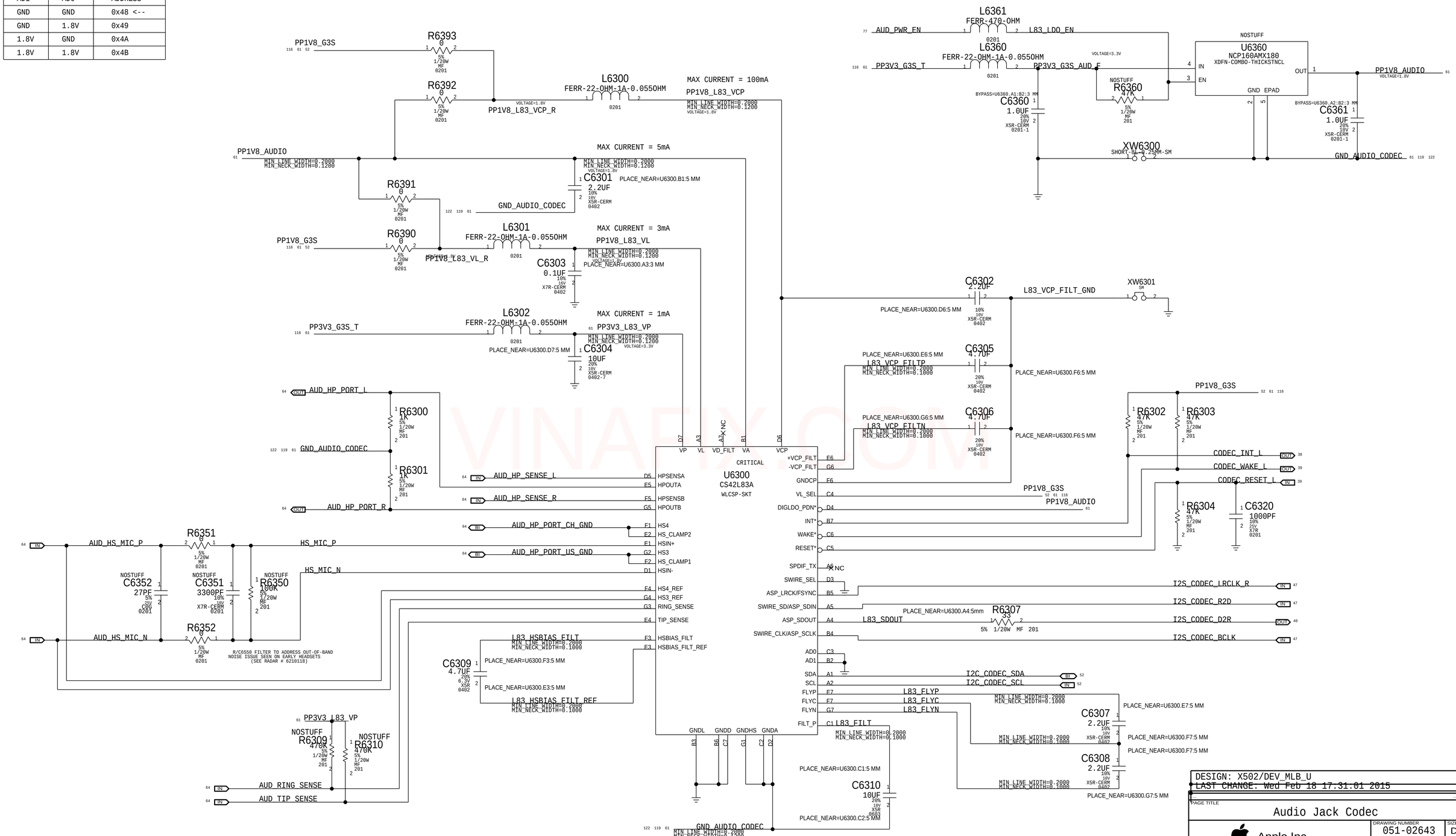

DESIGN: X502/DEV_MLB_U
LAST CHANGE: Wed Feb 18 17:31:01 2015

PAGE TITLE
Audio Jack Codec

Apple Inc.

DRAWING NUMBER 051-02643 SIZE D
REVISION 4.0.0
BRANCH evt-0
PAGE 63 OF 200
SHEET 61 OF 131

NOTICE OF PROPRIETARY PROPERTY:
THE INFORMATION CONTAINED HEREIN IS THE PROPRIETARY PROPERTY OF APPLE INC.
THE POSESSOR AGREES TO THE FOLLOWING:
I TO MAINTAIN THIS DOCUMENT IN CONFIDENCE
II NOT TO REPRODUCE OR COPY IT
III NOT TO REVEAL OR PUBLISH IT IN WHOLE OR PART
IV ALL RIGHTS RESERVED

2X MONO SPEAKER LEFT AMPLIFIERS

APN: 353S01252
GAIN: 0DBFS = xxVRMS

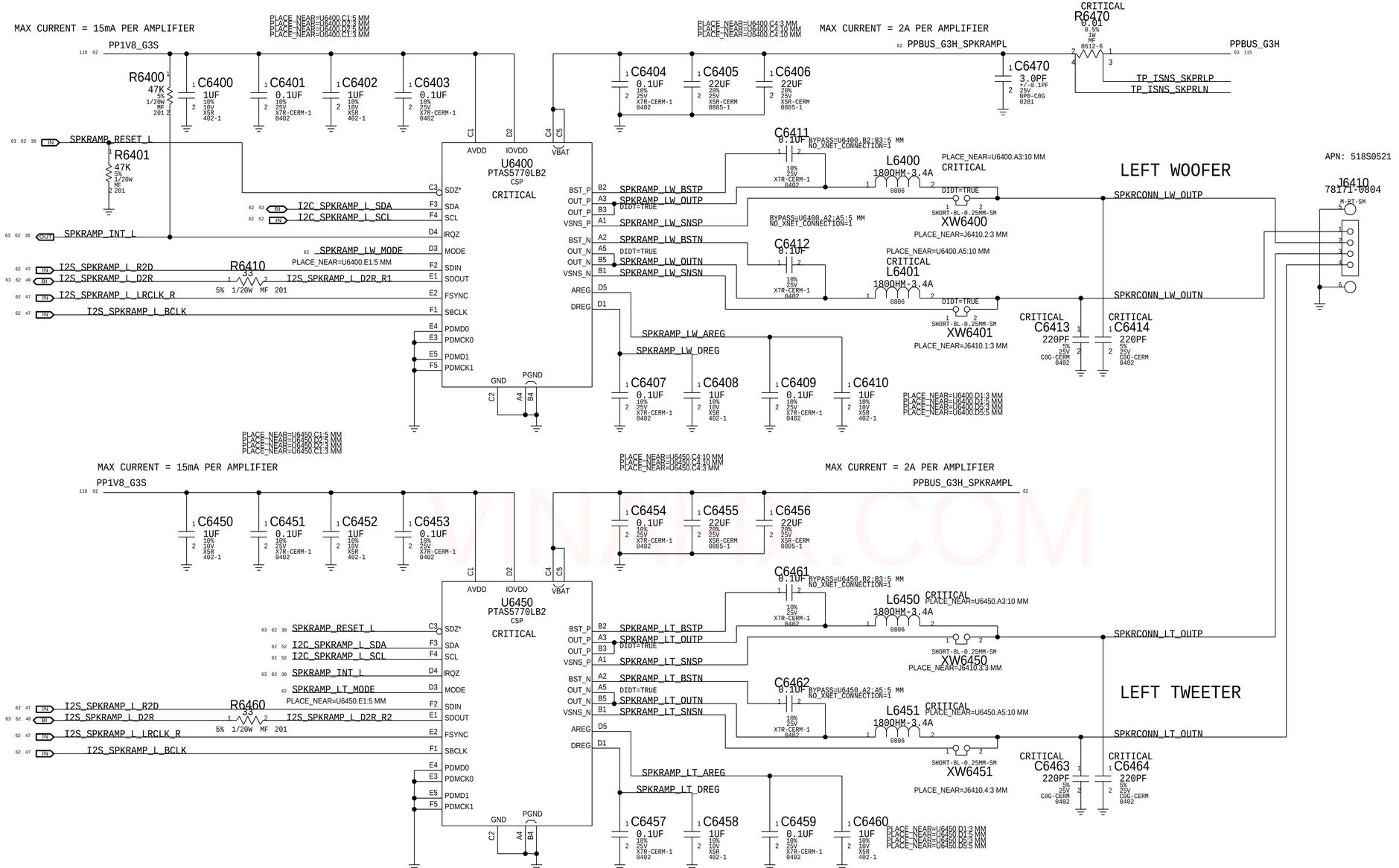

I2C ADDRESS

MODE PIN	7-BIT	CHANNEL
GND	0x31	L TW
470 to GND	0x32	L WF
470 to IOVDD	0x33	R TW
2K2 to GND	0x34	R WF
2K2 to IOVDD	0x35	
10K to GND	0x36	
10K to IOVDD	0x37	
47K to IOVDD	0x38	

BOM_COST_GROUP=AUDIO

SYNC_MASTER=TROY SYNC_DATE=12/11/2017

PAGE TITLE: Audio Left Amplifiers

Apple Inc.

DRAWING NUMBER: 051-02643 SIZE: D
REVISION: 4.0.0
BRANCH: evt-0
PAGE: 64 OF 200
SHEET: 62 OF 131

NOTICE OF PROPRIETARY PROPERTY:
THE INFORMATION CONTAINED HEREIN IS THE PROPRIETARY PROPERTY OF APPLE INC.
THE POSESSOR AGREES TO THE FOLLOWING:
I TO MAINTAIN THIS DOCUMENT IN CONFIDENCE
II NOT TO REPRODUCE OR COPY IT
III NOT TO REVEAL OR PUBLISH IT IN WHOLE OR PART
IV ALL RIGHTS RESERVED

2X MONO SPEAKER RIGHT AMPLIFIERS

APN: 353S01252
GAIN: 0DBFS = xxVRMS

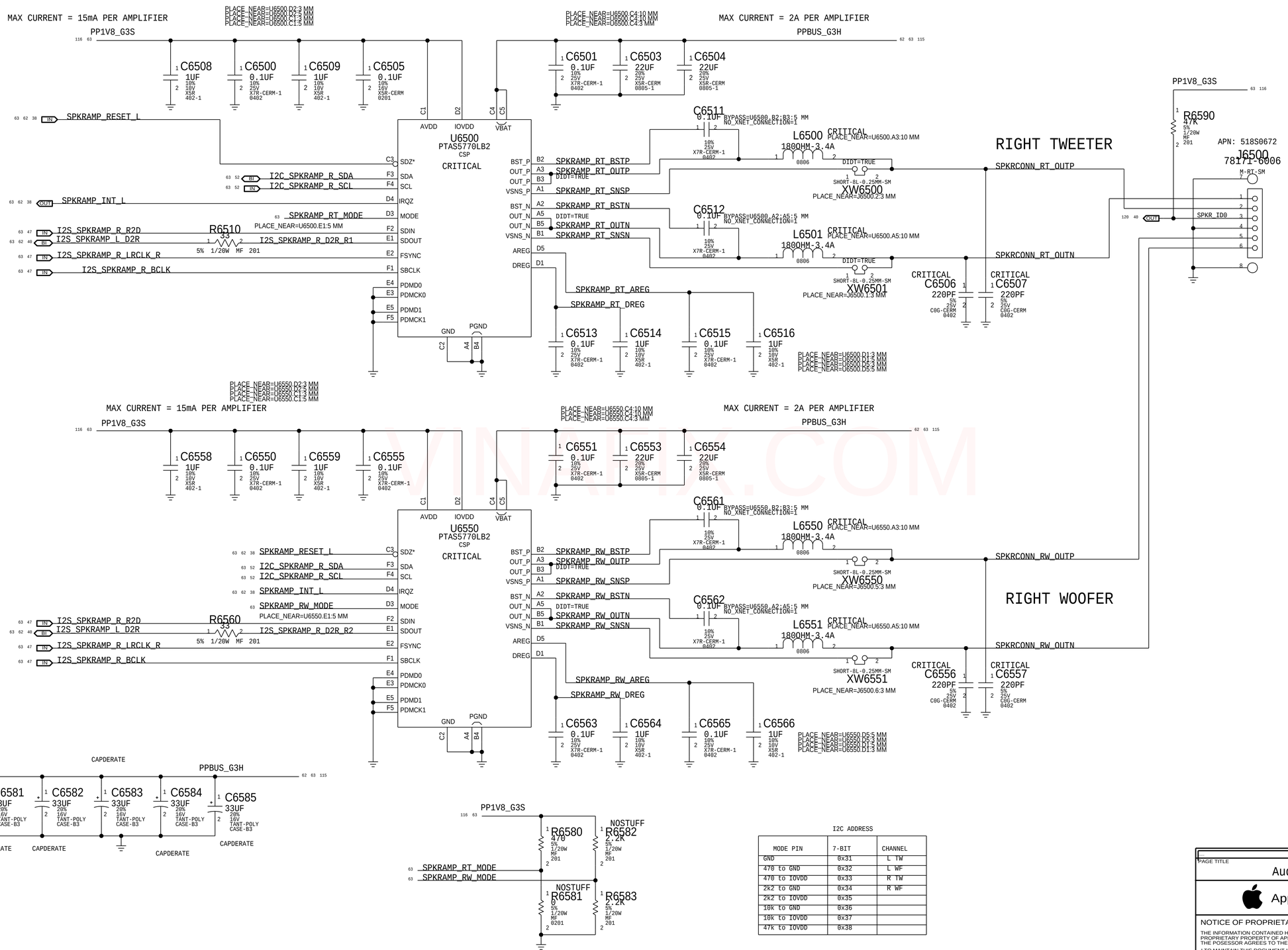

I2C ADDRESS

MODE PIN	7-BIT	CHANNEL
GND	0x31	L TW
470 to GND	0x32	L WF
470 to IOVDD	0x33	R TW
2K2 to GND	0x34	R WF
2K2 to IOVDD	0x35	
10k to GND	0x36	
10k to IOVDD	0x37	
47k to IOVDD	0x38	

BOM_COST_GROUP=AUDIO

PAGE TITLE: Audio Right Amplifiers

Apple Inc.

DRAWING NUMBER: 051-02643 SIZE: D
REVISION: 4.0.0
BRANCH: evt-0
PAGE: 65 OF 200
SHEET: 63 OF 131

NOTICE OF PROPRIETARY PROPERTY:
THE INFORMATION CONTAINED HEREIN IS THE PROPRIETARY PROPERTY OF APPLE INC.
THE POSESSOR AGREES TO THE FOLLOWING:
I TO MAINTAIN THIS DOCUMENT IN CONFIDENCE
II NOT TO REPRODUCE OR COPY IT
III NOT TO REVEAL OR PUBLISH IT IN WHOLE OR PART
IV ALL RIGHTS RESERVED

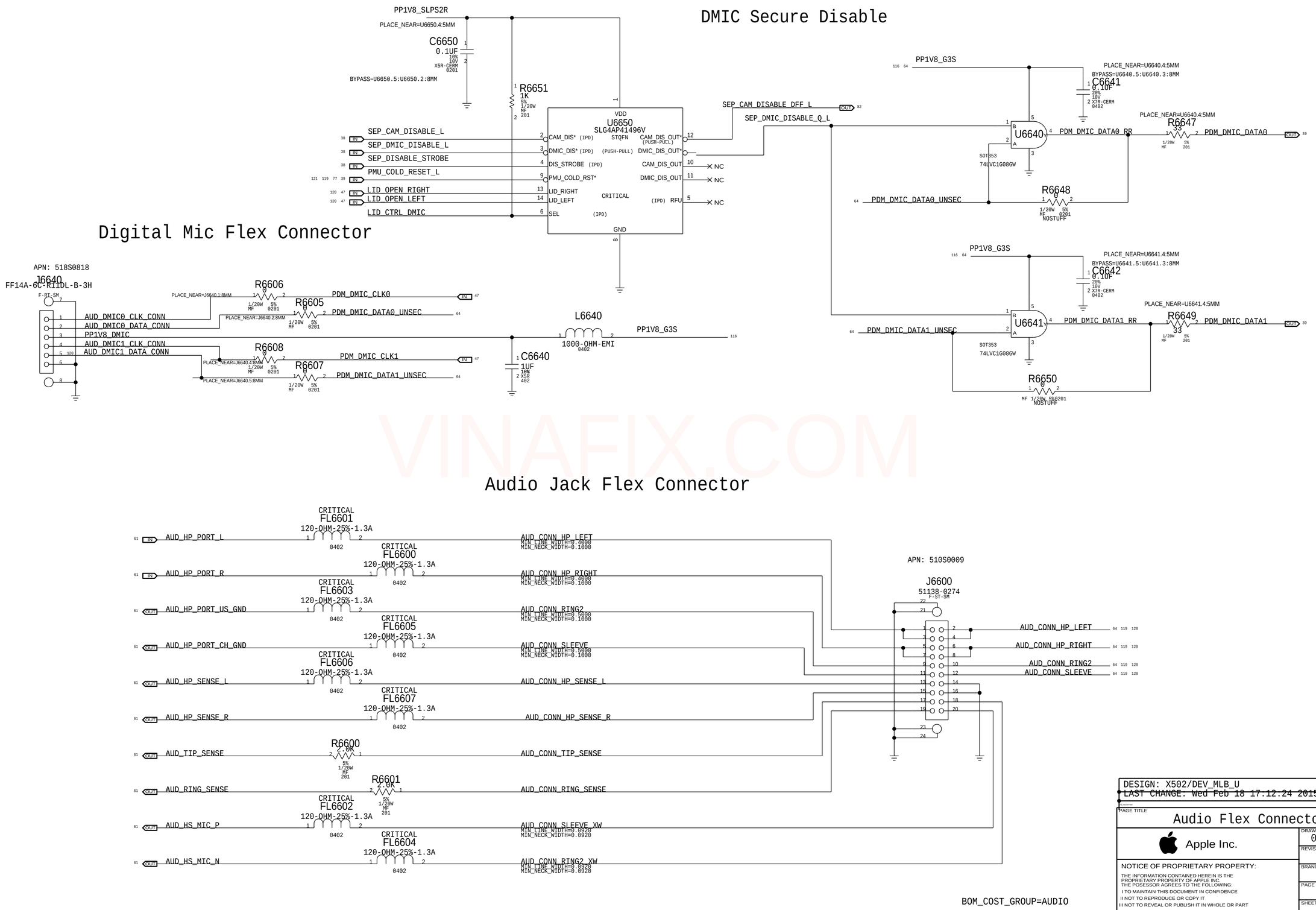

VINAFIX.COM

DESIGN: X502/DEV_MLB_U
LAST CHANGE: Wed Feb 18 17:12:24 2015

PAGE TITLE
Audio Flex Connectors

Apple Inc.

DRAWING NUMBER	051-02643
SIZE	D
REVISION	4.0.0
BRANCH	evt-0
PAGE	66 OF 200
SHEET	64 OF 131

NOTICE OF PROPRIETARY PROPERTY:
THE INFORMATION CONTAINED HEREIN IS THE PROPRIETARY PROPERTY OF APPLE INC.
THE POSESSOR AGREES TO THE FOLLOWING:
I TO MAINTAIN THIS DOCUMENT IN CONFIDENCE
II NOT TO REPRODUCE OR COPY IT
III NOT TO REVEAL OR PUBLISH IT IN WHOLE OR PART
IV ALL RIGHTS RESERVED

KBD CONNECTOR

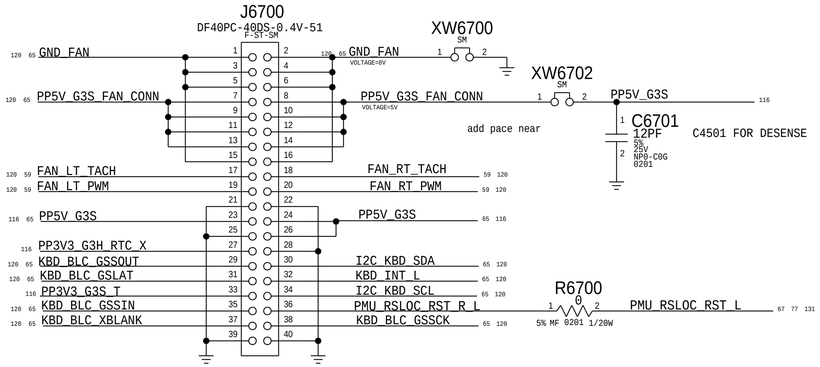

516S00177 (RCPT, 0.3A per pin)
MATE WITH PLUG 516S00054

TPAD CONNECTOR

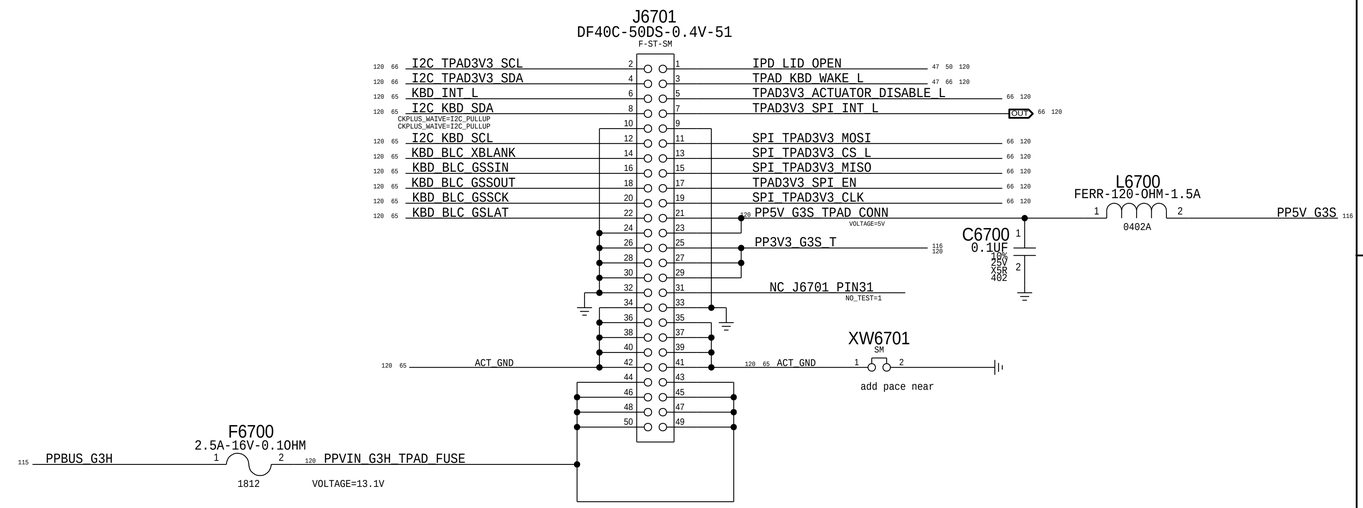

516S00187, MATE WITH 516S00188

VINAFIX.COM

BOM_COST_GROUP=KEYBOARD

SYNC_MASTER=1332 SYNC_DATE=03/23/2017

PAGE TITLE
Keyboard & Trackpad 1

Apple Inc.

DRAWING NUMBER 051-02643
SIZE D
REVISION 4.0.0
BRANCH evt-0
PAGE 67 OF 200
SHEET 65 OF 131

NOTICE OF PROPRIETARY PROPERTY:
THE INFORMATION CONTAINED HEREIN IS THE PROPRIETARY PROPERTY OF APPLE INC.
THE POSESSOR AGREES TO THE FOLLOWING:
I TO MAINTAIN THIS DOCUMENT IN CONFIDENCE
II NOT TO REPRODUCE OR COPY IT
III NOT TO REVEAL OR PUBLISH IT IN WHOLE OR PART
IV ALL RIGHTS RESERVED

Trackpad Level Shifting

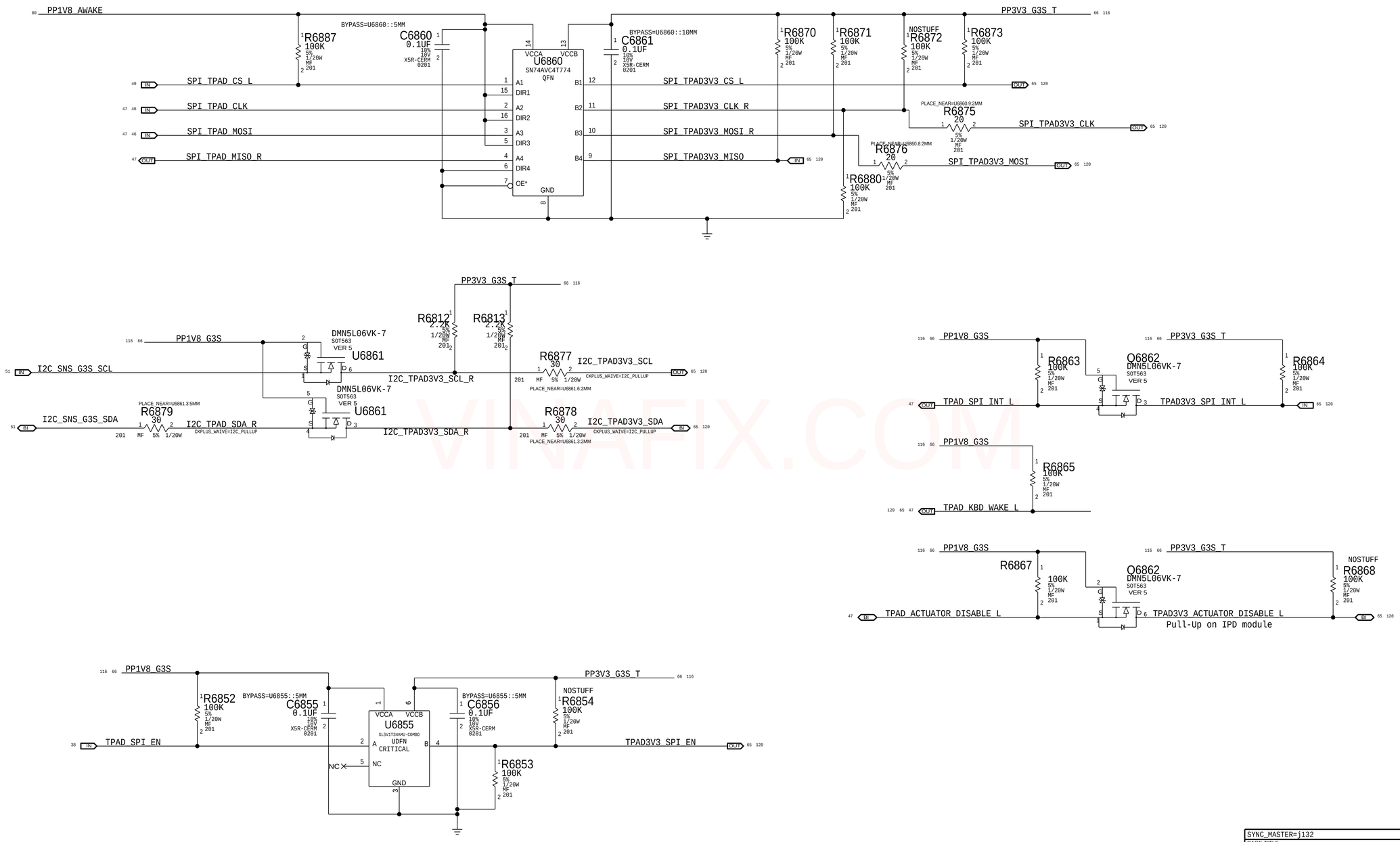

BOM_COST_GROUP=KEYBOARD

SYNC_MASTER=j132	SYNC_DATE=03/23/2017
PAGE TITLE	Keyboard & Trackpad 2
Apple Inc.	DRAWING NUMBER 051-02643
	SIZE D
	REVISION 4.0.0
	BRANCH evt-0
	PAGE 68 OF 200
	SHEET 66 OF 131

NOTICE OF PROPRIETARY PROPERTY:
THE INFORMATION CONTAINED HEREIN IS THE PROPRIETARY PROPERTY OF APPLE INC.
THE POSESSOR AGREES TO THE FOLLOWING:
I TO MAINTAIN THIS DOCUMENT IN CONFIDENCE
II NOT TO REPRODUCE OR COPY IT
III NOT TO REVEAL OR PUBLISH IT IN WHOLE OR PART
IV ALL RIGHTS RESERVED

VINAFIX.COM

J80 Battery Hotbar Flex Pads 998-03902
Flex Pad TO MLB 998-03780.

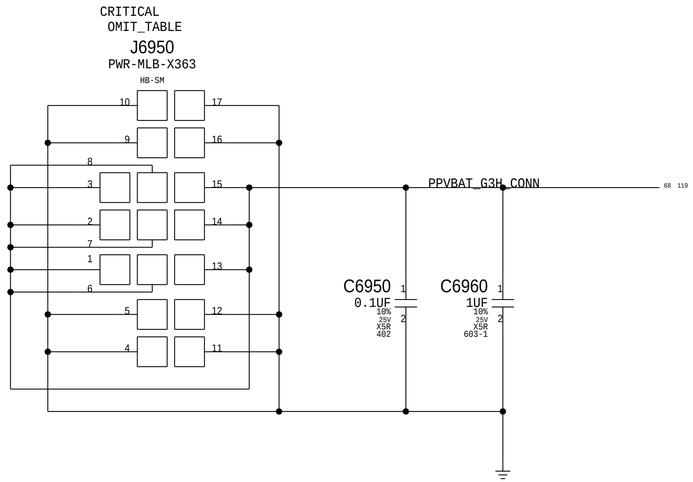

BMU POWER FLEX HOTBAR'd TO THE MLB:

PART NUMBER	QTY	DESCRIPTION	REFERENCE DES	CRITICAL	BOM OPTION
632-00862	1	PCBA,FLEX,BMU PWR,X363	J6950	CRITICAL	

APN:518S0818

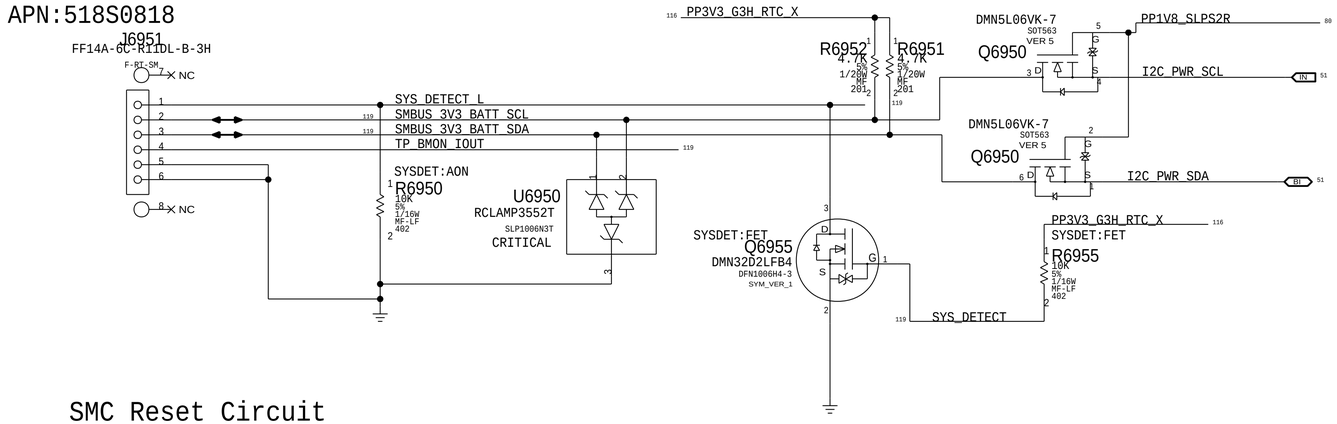

SMC Reset Circuit

Right Shift & Left Option Control
followed by ON OFF button press.

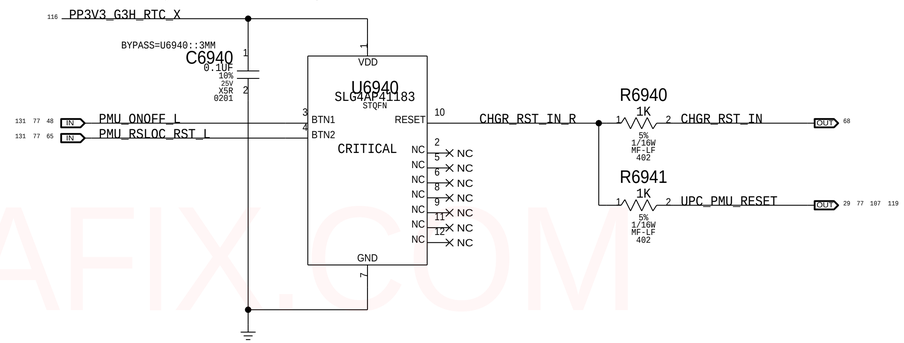

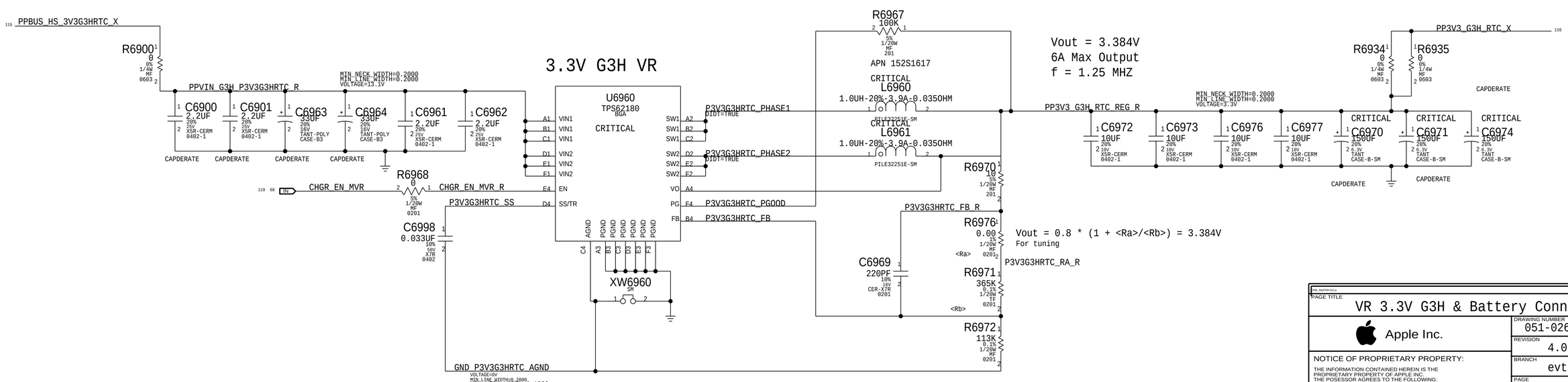

PAGE TITLE
VR 3.3V G3H & Battery Conn

Apple Inc.

DRAWING NUMBER 051-02643 SIZE D
REVISION 4.0.0
BRANCH evt-0
PAGE 69 OF 200
SHEET 67 OF 131

NOTICE OF PROPRIETARY PROPERTY:
THE INFORMATION CONTAINED HEREIN IS THE PROPRIETARY PROPERTY OF APPLE INC.
THE POSESSOR AGREES TO THE FOLLOWING:
I TO MAINTAIN THIS DOCUMENT IN CONFIDENCE
II NOT TO REPRODUCE OR COPY IT
III NOT TO REVEAL OR PUBLISH IT IN WHOLE OR PART
IV ALL RIGHTS RESERVED

VINAFIX.COM

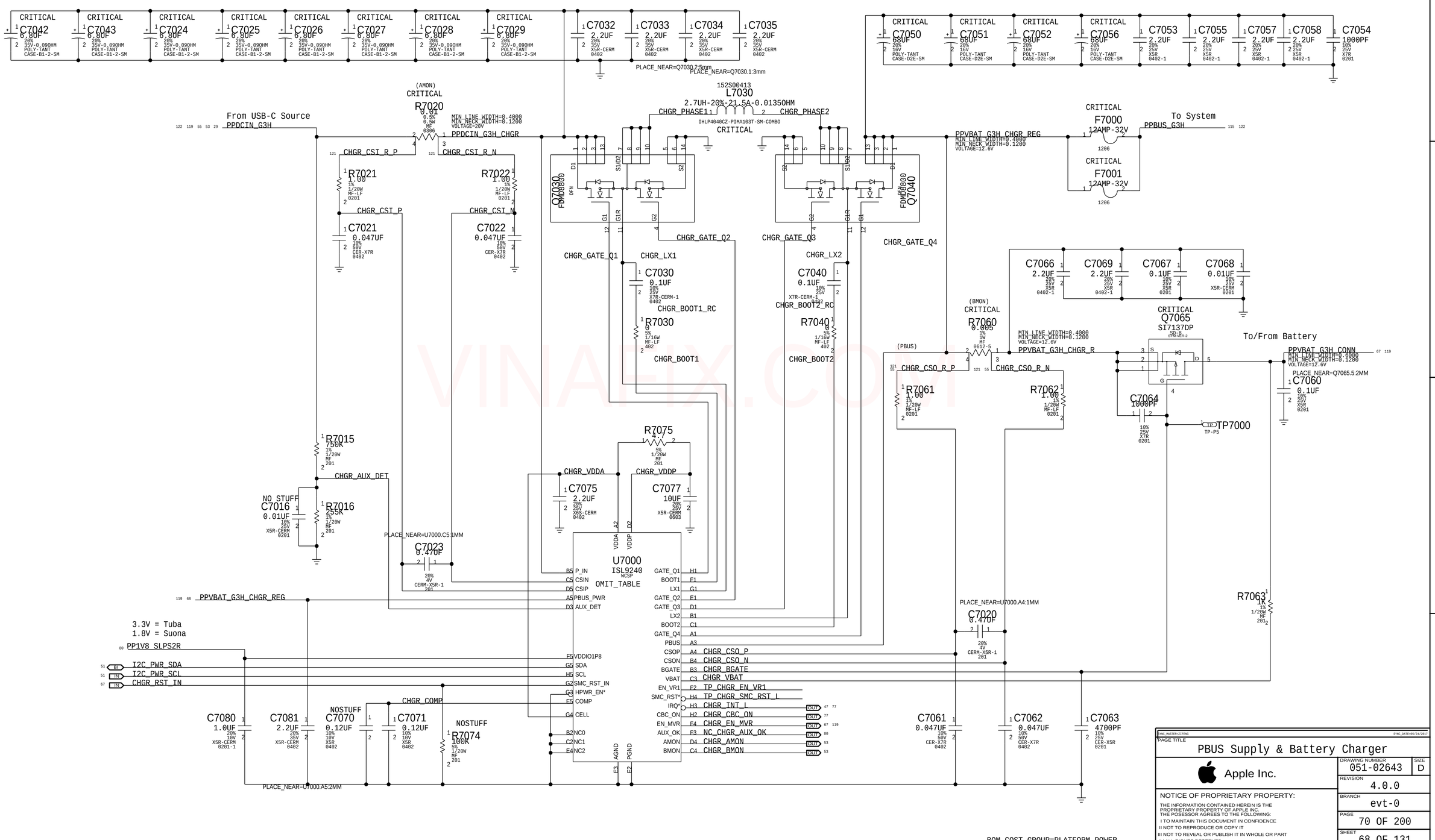

PAGE TITLE
PBUS Supply & Battery Charger

Apple Inc.

DRAWING NUMBER 051-02643 SIZE D
REVISION 4.0.0
BRANCH evt-0
PAGE 70 OF 200
SHEET 68 OF 131

NOTICE OF PROPRIETARY PROPERTY:
THE INFORMATION CONTAINED HEREIN IS THE PROPRIETARY PROPERTY OF APPLE INC.
THE POSESSOR AGREES TO THE FOLLOWING:
I TO MAINTAIN THIS DOCUMENT IN CONFIDENCE
II NOT TO REPRODUCE OR COPY IT
III NOT TO REVEAL OR PUBLISH IT IN WHOLE OR PART
IV ALL RIGHTS RESERVED

VINAFIX.COM

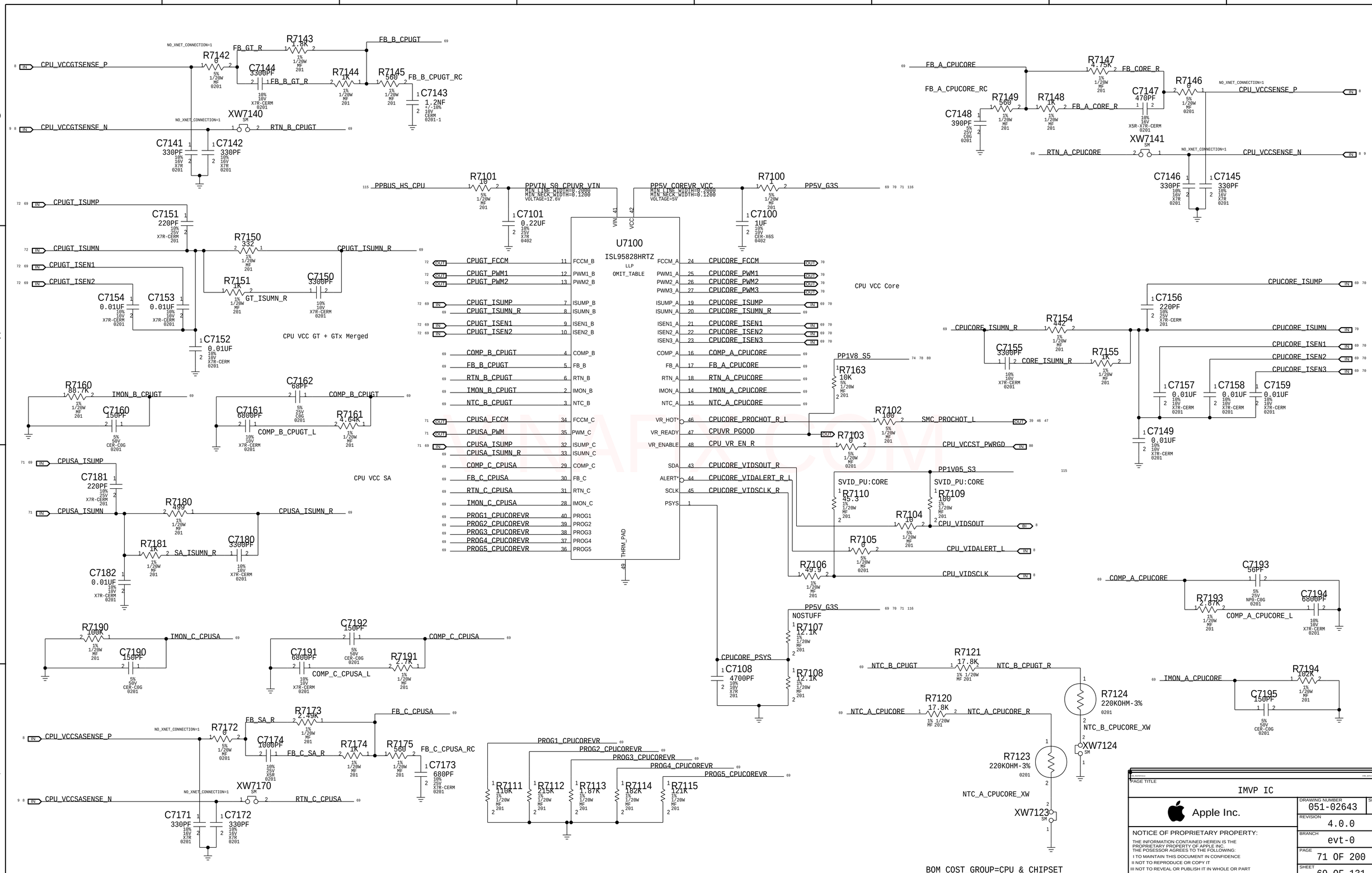
CPU_VCCGTSENSE_P
CPU_VCCGTSENSE_N
R7142 0
R7143 1.8K
C7144 3300PF
R7144 1K
R7145 560
C7143 1.2NF
FB_B_CPUGT
FB_B_CPUGT_RC
FB_GT_R
FB_B_GT_R
XW7140
RTN_B_CPUGT
C7141 330PF
C7142 330PF
CPUGT_ISUMP
CPUGT_ISUMN
CPUGT_ISEN1
CPUGT_ISEN2
C7151 220PF
R7150 332
CPUGT_ISUMN_R
R7151 1K
GT_ISUMN_R
C7150 3300PF
C7154 0.01UF
C7153 0.01UF
C7152 0.01UF
CPU VCC GT + GTx Merged
R7160 88.7K
IMON_B_CPUGT
C7160 150PF
C7162 68PF
COMP_B_CPUGT
C7161 6800PF
COMP_B_CPUGT_L
R7161 4.64K
CPUSA_ISUMP
C7181 220PF
CPUSA_ISUMN
R7180 499
CPUSA_ISUMN_R
R7181 1K
SA_ISUMN_R
C7180 3300PF
C7182 0.01UF
CPU VCC SA
R7190 100K
IMON_C_CPUSA
C7190 150PF
C7192 150PF
COMP_C_CPUSA
C7191 6800PF
COMP_C_CPUSA_L
R7191 2.7K
CPU_VCCSASENSE_P
CPU_VCCSASENSE_N
R7172 0
FB_SA_R
R7173 2.49K
FB_C_CPUSA
C7174 1000PF
FB_C_SA_R
R7174 1K
R7175 560
FB_C_CPUSA_RC
C7173 680PF
XW7170
RTN_C_CPUSA
C7171 330PF
C7172 330PF
PPBUS_HS_CPU
R7101 10
PPVIN_S0_CPUVR_VIN
C7101 0.22UF
PP5V_COREVR_VCC
R7100 1
PP5V_G3S
C7100 1UF
U7100
ISL95828HRTZ
LLP
OMIT_TABLE
VIN_41
VCC_42
THRM_PAD
49
CPUGT_FCCM
CPUGT_PWM1
CPUGT_PWM2
CPUGT_ISUMP
CPUGT_ISUMN_R
CPUGT_ISEN1
CPUGT_ISEN2
COMP_B_CPUGT
FB_B_CPUGT
RTN_B_CPUGT
IMON_B_CPUGT
NTC_B_CPUGT
CPUSA_FCCM
CPUSA_PWM
CPUSA_ISUMP
CPUSA_ISUMN_R
COMP_C_CPUSA
FB_C_CPUSA
RTN_C_CPUSA
IMON_C_CPUSA
PROG1_CPUCOREVR
PROG2_CPUCOREVR
PROG3_CPUCOREVR
PROG4_CPUCOREVR
PROG5_CPUCOREVR
FCCM_B
PWM1_B
PWM2_B
ISUMP_B
ISUMN_B
ISEN1_B
ISEN2_B
COMP_B
FB_B
RTN_B
IMON_B
NTC_B
FCCM_C
PWM_C
ISUMP_C
ISUMN_C
COMP_C
FB_C
RTN_C
IMON_C
PROG1
PROG2
PROG3
PROG4
PROG5
FCCM_A
PWM1_A
PWM2_A
PWM3_A
ISUMP_A
ISUMN_A
ISEN1_A
ISEN2_A
ISEN3_A
COMP_A
FB_A
RTN_A
IMON_A
NTC_A
VR_HOT*
VR_READY
VR_ENABLE
SDA
ALERT*
SCLK
PSYS
CPUCORE_FCCM
CPUCORE_PWM1
CPUCORE_PWM2
CPUCORE_PWM3
CPUCORE_ISUMP
CPUCORE_ISUMN_R
CPUCORE_ISEN1
CPUCORE_ISEN2
CPUCORE_ISEN3
COMP_A_CPUCORE
FB_A_CPUCORE
RTN_A_CPUCORE
IMON_A_CPUCORE
NTC_A_CPUCORE
CPUCORE_PROCHOT_R_L
CPUVR_PGOOD
CPU_VR_EN_R
CPUCORE_VIDSOUT_R
CPUCORE_VIDALERT_R_L
CPUCORE_VIDSCLK_R
CPU VCC Core
PP1V8_S5
R7163 10K
R7102 100
SMC_PROCHOT_L
R7103 0
CPU_VCCST_PWRGD
PP1V05_S3
SVID_PU:CORE
R7110 45.3
R7109 100
R7104 10
CPU_VIDSOUT
R7105 0
CPU_VIDALERT_L
R7106 49.9
CPU_VIDSCLK
PP5V_G3S
NOSTUFF
R7107 12.1K
R7108 12.1K
CPUCORE_PSYS
C7108 4700PF
R7111 110K
R7112 215K
R7113 1.87K
R7114 182K
R7115 121K
R7121 17.8K
NTC_B_CPUGT
NTC_B_CPUGT_R
R7120 17.8K
NTC_A_CPUCORE
NTC_A_CPUCORE_R
R7124 220KOHM-3%
NTC_B_CPUCORE_XW
XW7124
R7123 220KOHM-3%
NTC_A_CPUCORE_XW
XW7123
BOM_COST_GROUP=CPU & CHIPSET
FB_A_CPUCORE
FB_A_CPUCORE_RC
R7147 4.75K
FB_CORE_R
R7149 560
R7148 1K
FB_A_CORE_R
C7147 470PF
C7148 390PF
R7146 0
CPU_VCCSENSE_P
XW7141
RTN_A_CPUCORE
CPU_VCCSENSE_N
C7146 330PF
C7145 330PF
CPUCORE_ISUMP
CPUCORE_ISUMN_R
R7154 442
C7155 3300PF
CORE_ISUMN_R
R7155 1K
C7156 220PF
CPUCORE_ISUMN
CPUCORE_ISEN1
CPUCORE_ISEN2
CPUCORE_ISEN3
C7157 0.01UF
C7158 0.01UF
C7159 0.01UF
C7149 0.01UF
COMP_A_CPUCORE
C7193 56PF
R7193 2.87K
COMP_A_CPUCORE_L
C7194 6800PF
IMON_A_CPUCORE
R7194 102K
C7195 150PF
PAGE TITLE
IMVP IC
Apple Inc.
DRAWING NUMBER 051-02643
SIZE D
REVISION 4.0.0
BRANCH evt-0
PAGE 71 OF 200
SHEET 69 OF 131
NOTICE OF PROPRIETARY PROPERTY:
THE INFORMATION CONTAINED HEREIN IS THE PROPRIETARY PROPERTY OF APPLE INC.
THE POSESSOR AGREES TO THE FOLLOWING:
I TO MAINTAIN THIS DOCUMENT IN CONFIDENCE
II NOT TO REPRODUCE OR COPY IT
III NOT TO REVEAL OR PUBLISH IT IN WHOLE OR PART
IV ALL RIGHTS RESERVED

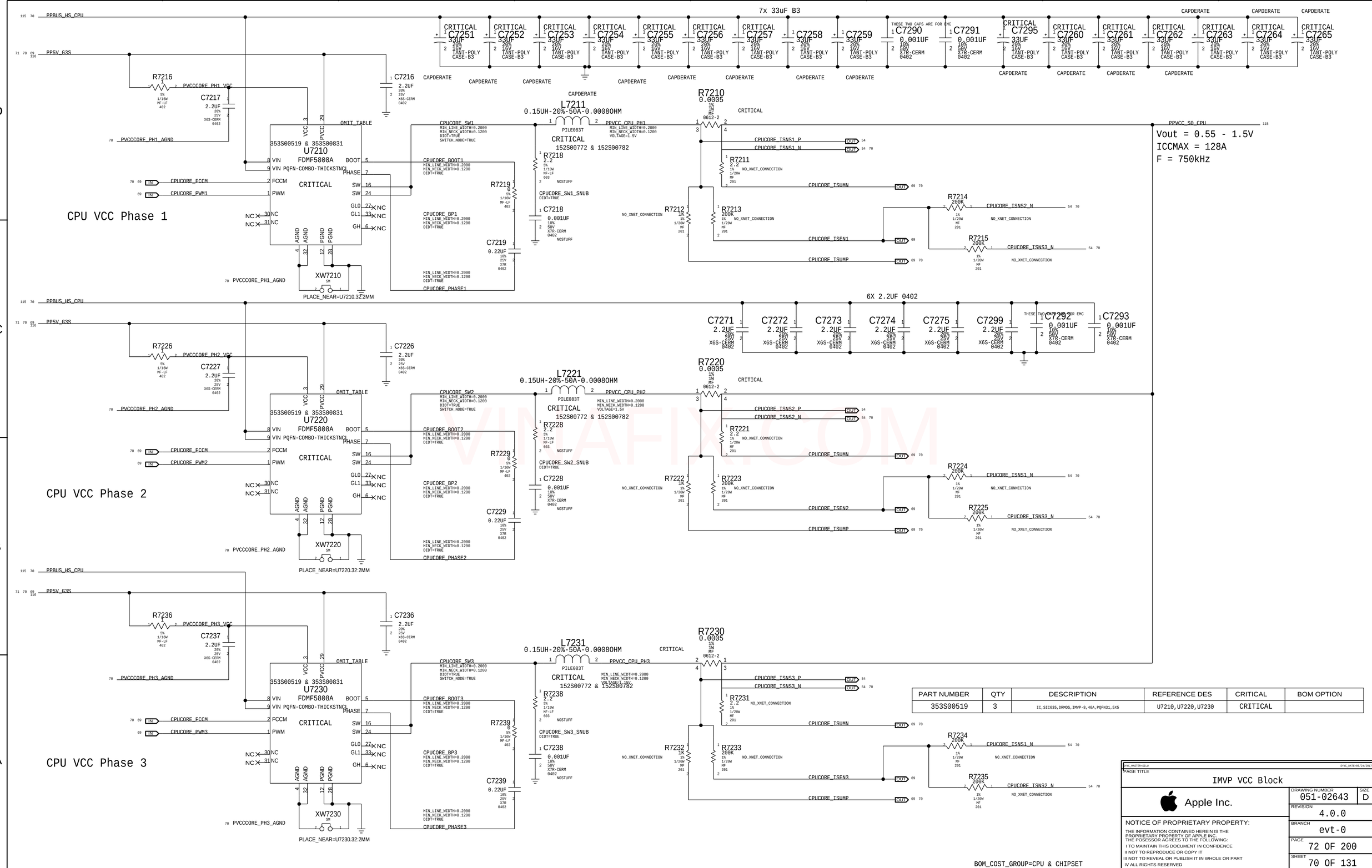

PART NUMBER	QTY	DESCRIPTION	REFERENCE DES	CRITICAL	BOM OPTION
353S00519	3	IC,SIC635,DRMOS,IMVP-8,40A,PQFN31,5X5	U7210,U7220,U7230	CRITICAL	

BOM_COST_GROUP=CPU & CHIPSET

SYNC_MASTER=J1LU SYNC_DATE=05/24/2017

PAGE TITLE

IMVP VCC Block

Apple Inc.

DRAWING NUMBER 051-02643 SIZE D

REVISION 4.0.0

BRANCH evt-0

PAGE 72 OF 200

SHEET 70 OF 131

NOTICE OF PROPRIETARY PROPERTY:
THE INFORMATION CONTAINED HEREIN IS THE PROPRIETARY PROPERTY OF APPLE INC.
THE POSESSOR AGREES TO THE FOLLOWING:
I TO MAINTAIN THIS DOCUMENT IN CONFIDENCE
II NOT TO REPRODUCE OR COPY IT
III NOT TO REVEAL OR PUBLISH IT IN WHOLE OR PART
IV ALL RIGHTS RESERVED

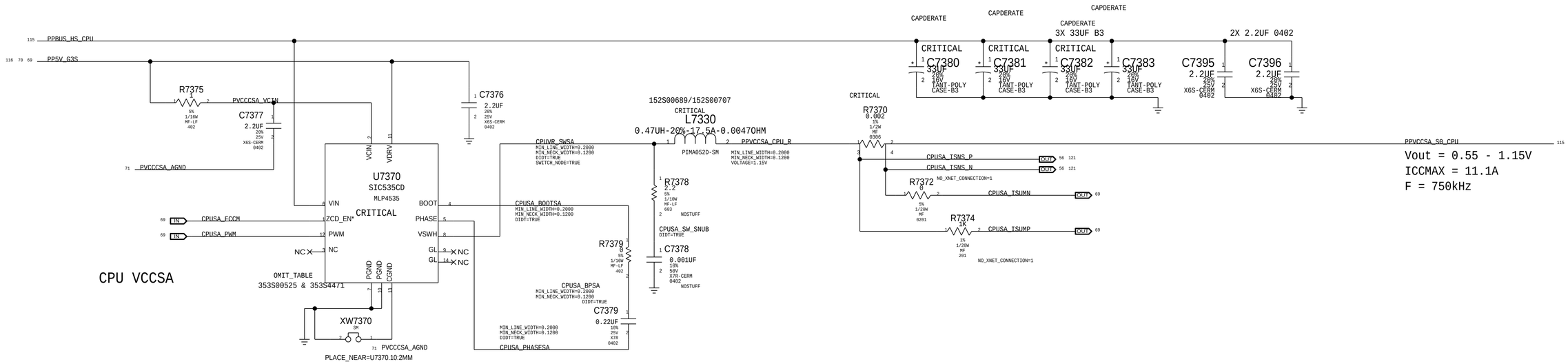

PART NUMBER	QTY	DESCRIPTION	REFERENCE DES	CRITICAL	BOM OPTION
353S00525	1	IC,SIC635,DRMOS,IMVP-8,40A,PQFN31,5X5	U7370	CRITICAL	

VINAFIX.COM

BOM_COST_GROUP=CPU & CHIPSET

SYNC_MASTER=S1L2 SYNC_DATE=05/16/2017

PAGE TITLE

IMVP SA Block

Apple Inc.

DRAWING NUMBER 051-02643 SIZE D

REVISION 4.0.0

BRANCH evt-0

PAGE 73 OF 200

SHEET 71 OF 131

NOTICE OF PROPRIETARY PROPERTY:
THE INFORMATION CONTAINED HEREIN IS THE PROPRIETARY PROPERTY OF APPLE INC.
THE POSESSOR AGREES TO THE FOLLOWING:
I TO MAINTAIN THIS DOCUMENT IN CONFIDENCE
II NOT TO REPRODUCE OR COPY IT
III NOT TO REVEAL OR PUBLISH IT IN WHOLE OR PART
IV ALL RIGHTS RESERVED

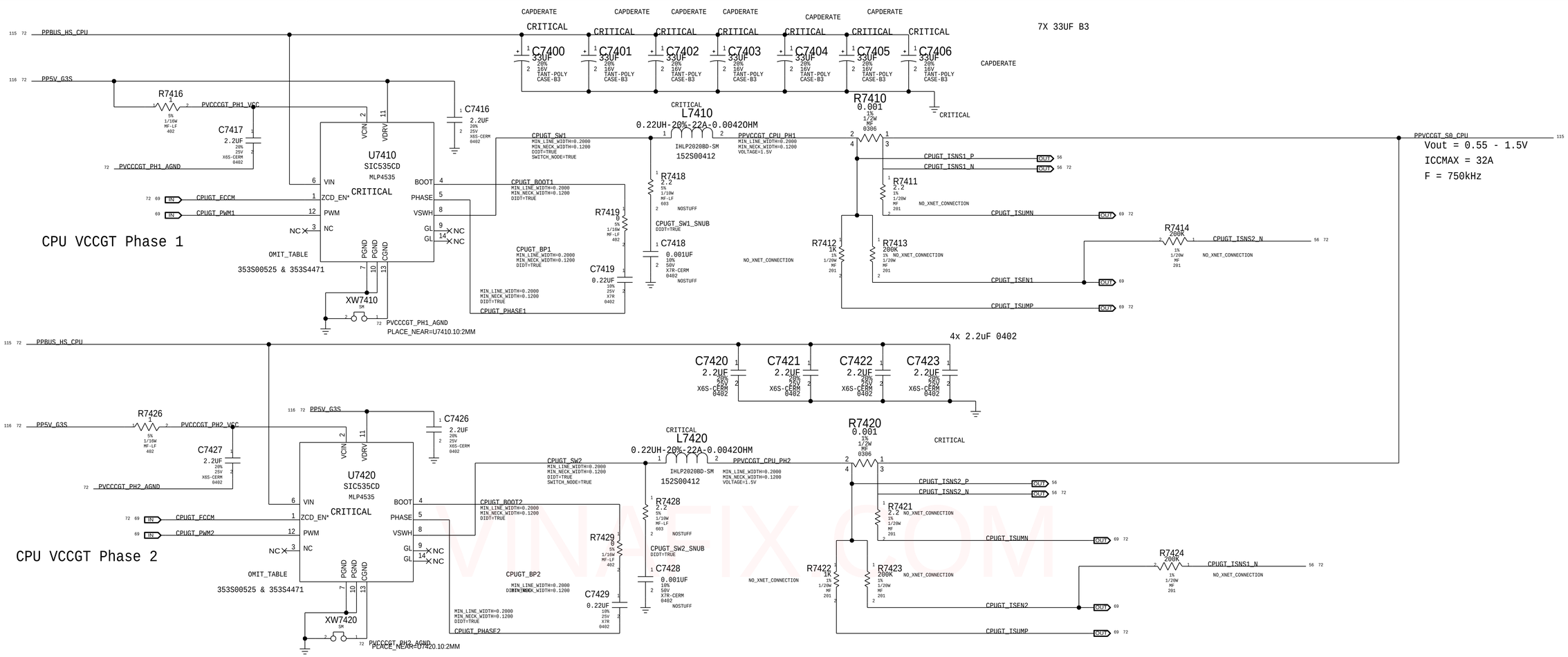

PART NUMBER	QTY	DESCRIPTION	REFERENCE DES	CRITICAL	BOM OPTION
353S00525	2	IC,SIC635,DRMOS,IMVP-8,40A,PQFN31,5X5	U7410,U7420	CRITICAL	

BOM_COST_GROUP=CPU & CHIPSET

PAGE TITLE
IMVP GT Block

Apple Inc.

DRAWING NUMBER 051-02643 SIZE D
REVISION 4.0.0
BRANCH evt-0
PAGE 74 OF 200
SHEET 72 OF 131

NOTICE OF PROPRIETARY PROPERTY:
THE INFORMATION CONTAINED HEREIN IS THE PROPRIETARY PROPERTY OF APPLE INC.
THE POSESSOR AGREES TO THE FOLLOWING:
I TO MAINTAIN THIS DOCUMENT IN CONFIDENCE
II NOT TO REPRODUCE OR COPY IT
III NOT TO REVEAL OR PUBLISH IT IN WHOLE OR PART
IV ALL RIGHTS RESERVED

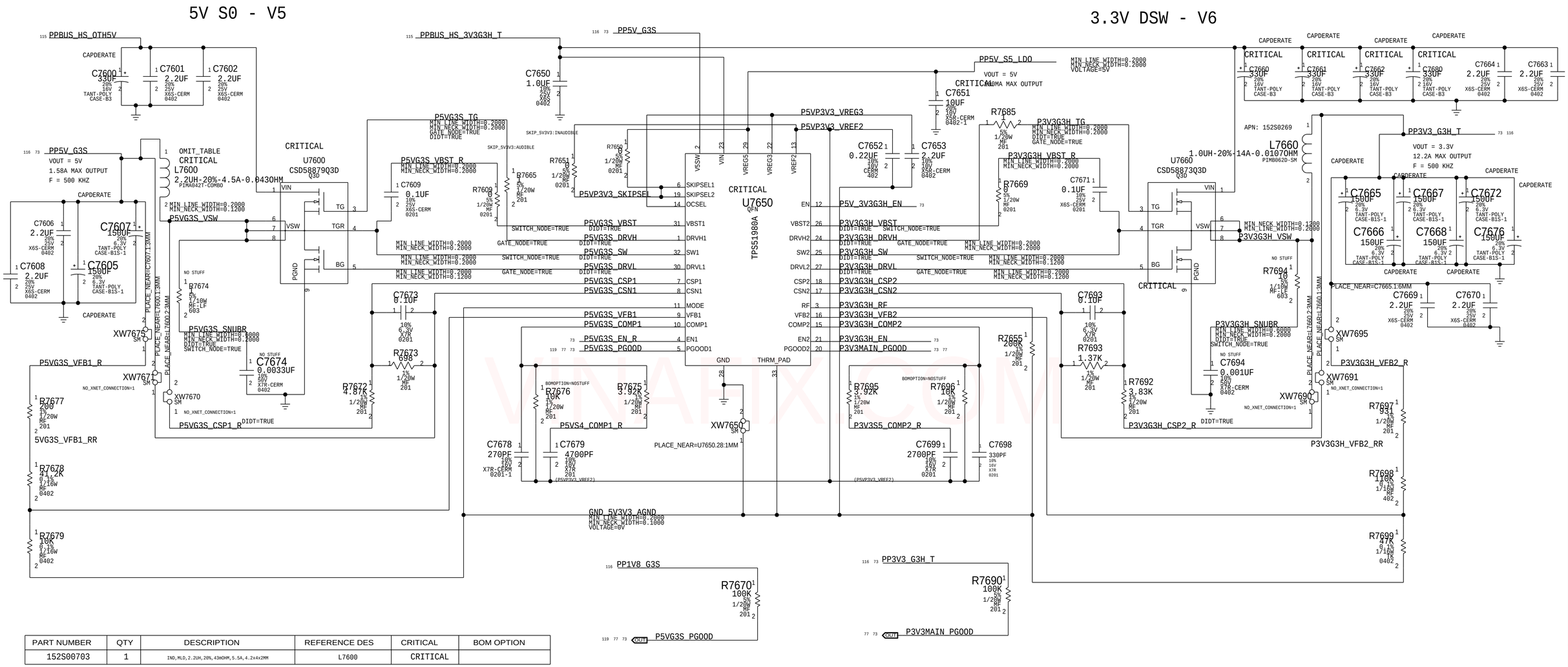

PART NUMBER	QTY	DESCRIPTION	REFERENCE DES	CRITICAL	BOM OPTION
152S00703	1	IND,MLD,2.2UH,20%,43mOHM,5.5A,4.2x4x2MM	L7600	CRITICAL	

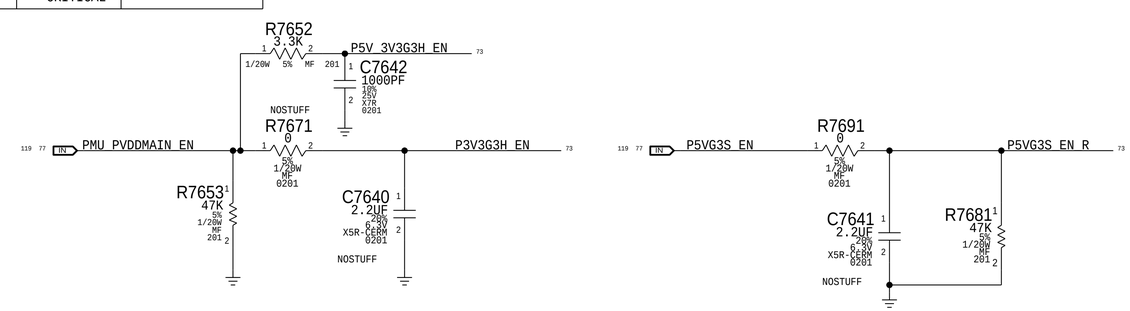

BOM_COST_GROUP=PLATFORM POWER

PAGE TITLE
Power - 5V 3.3V Supply

Apple Inc.

DRAWING NUMBER 051-02643
SIZE D
REVISION 4.0.0
BRANCH evt-0
PAGE 76 OF 200
SHEET 73 OF 131

NOTICE OF PROPRIETARY PROPERTY:
THE INFORMATION CONTAINED HEREIN IS THE PROPRIETARY PROPERTY OF APPLE INC.
THE POSESSOR AGREES TO THE FOLLOWING:
I TO MAINTAIN THIS DOCUMENT IN CONFIDENCE
II NOT TO REPRODUCE OR COPY IT
III NOT TO REVEAL OR PUBLISH IT IN WHOLE OR PART
IV ALL RIGHTS RESERVED

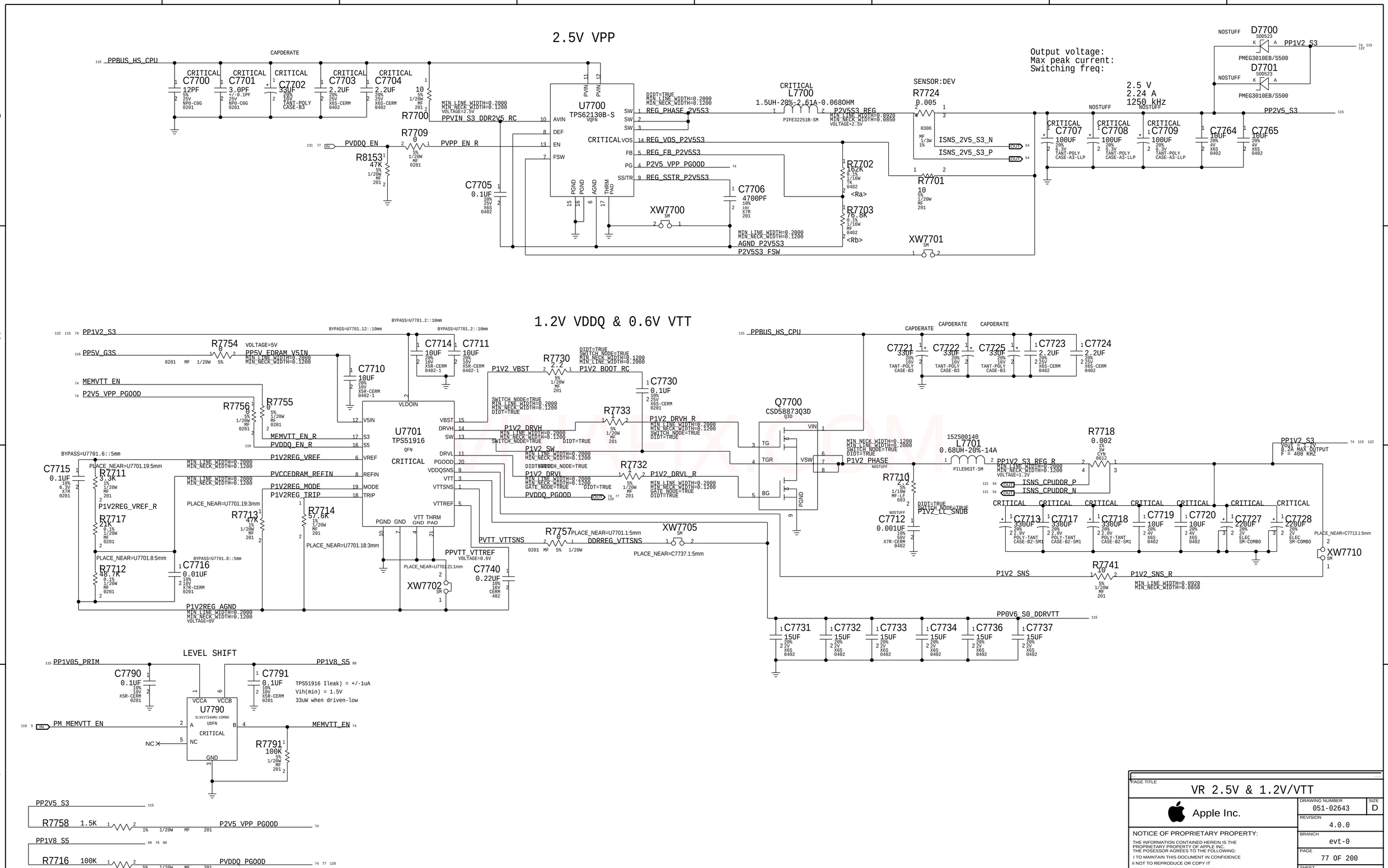

PAGE TITLE: VR 2.5V & 1.2V/VTT

Apple Inc.

DRAWING NUMBER: 051-02643 | SIZE: D

REVISION: 4.0.0

BRANCH: evt-0

PAGE: 77 OF 200

SHEET: 74 OF 131

NOTICE OF PROPRIETARY PROPERTY:
THE INFORMATION CONTAINED HEREIN IS THE PROPRIETARY PROPERTY OF APPLE INC.
THE POSESSOR AGREES TO THE FOLLOWING:
I TO MAINTAIN THIS DOCUMENT IN CONFIDENCE
II NOT TO REPRODUCE OR COPY IT
III NOT TO REVEAL OR PUBLISH IT IN WHOLE OR PART
IV ALL RIGHTS RESERVED

Note : Design based on Calpe ERS - D2449-A0-110-00_0v3.pdf (Radar# 24696002)
System Block Diagram - T290 Power System Architecture . v9
Optimize componentS for individual projects based on EDP(A)

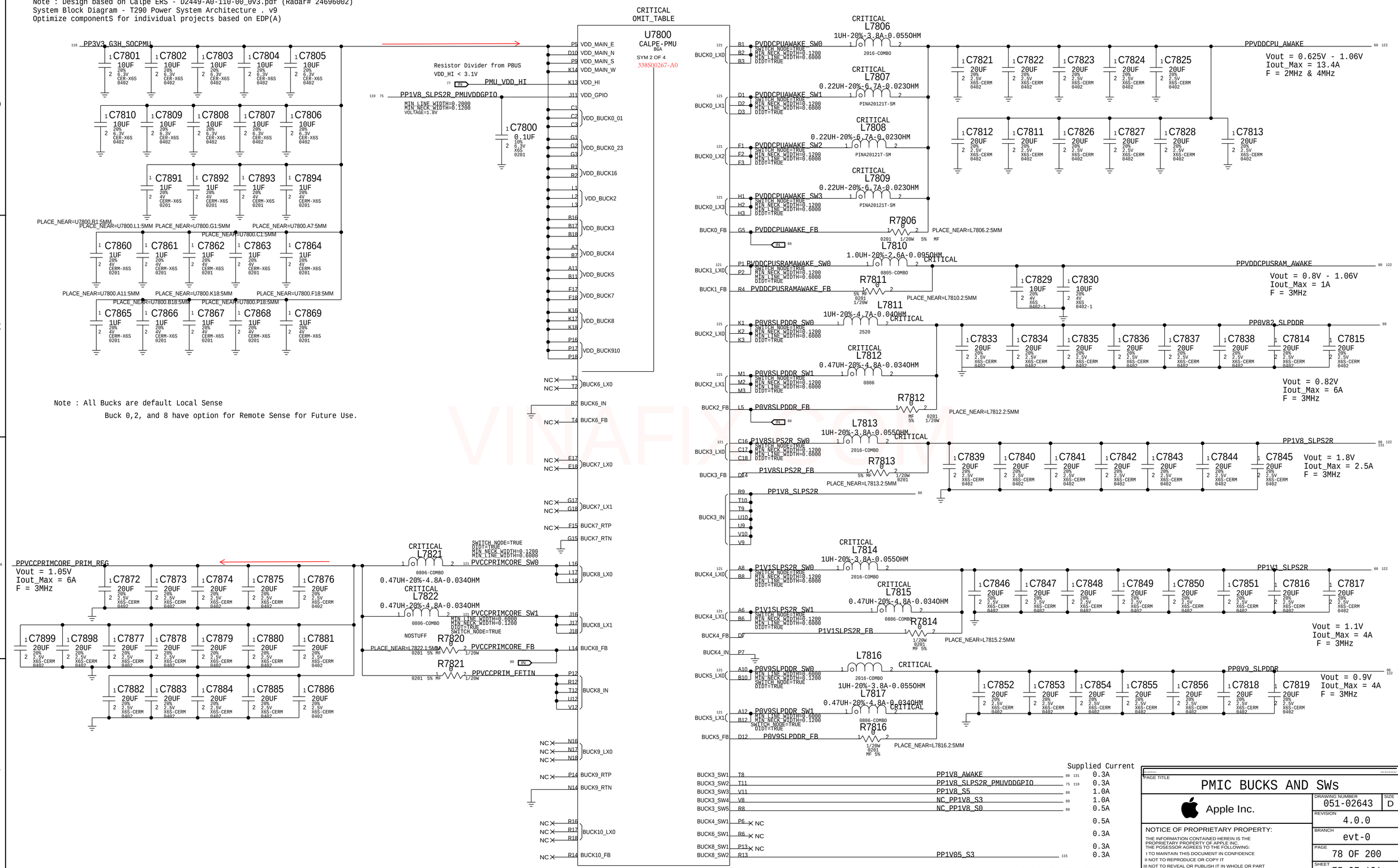

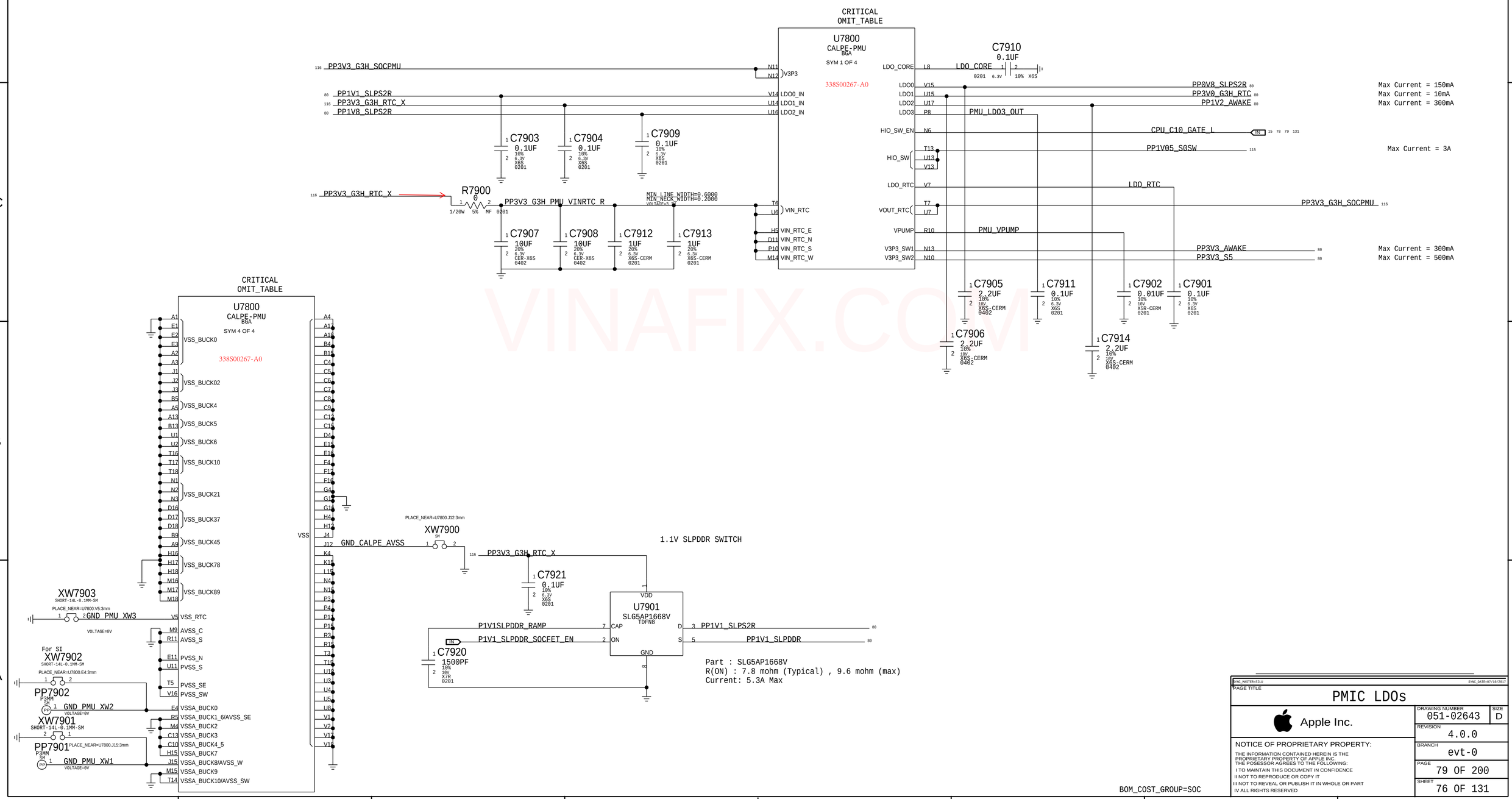

VINAFIX.COM

PAGE TITLE

PMIC LDOs

Apple Inc.

DRAWING NUMBER 051-02643 SIZE D

REVISION 4.0.0

BRANCH evt-0

PAGE 79 OF 200

SHEET 76 OF 131

NOTICE OF PROPRIETARY PROPERTY:
THE INFORMATION CONTAINED HEREIN IS THE PROPRIETARY PROPERTY OF APPLE INC.
THE POSESSOR AGREES TO THE FOLLOWING:
I TO MAINTAIN THIS DOCUMENT IN CONFIDENCE
II NOT TO REPRODUCE OR COPY IT
III NOT TO REVEAL OR PUBLISH IT IN WHOLE OR PART
IV ALL RIGHTS RESERVED

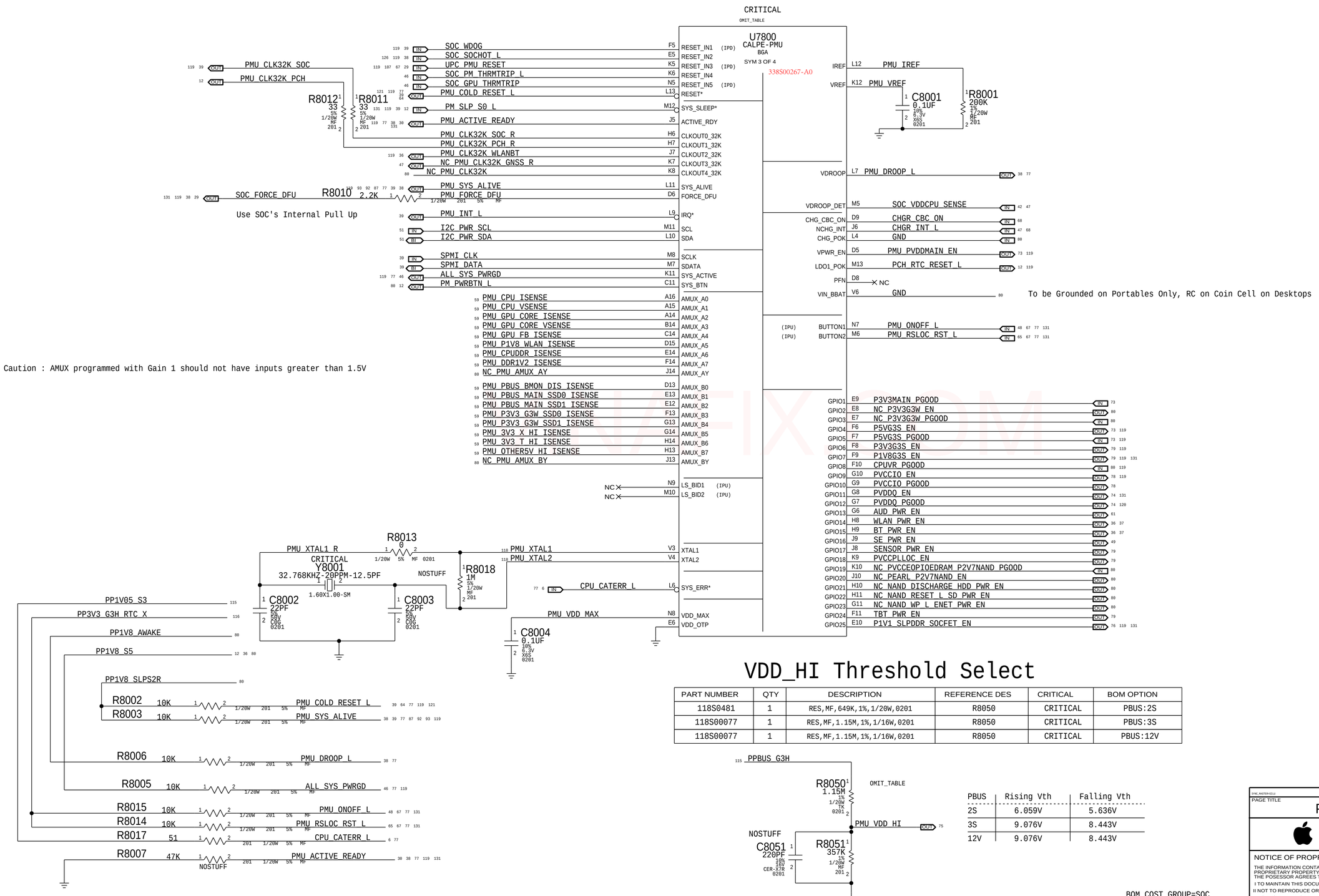

VDD_HI Threshold Select

PART NUMBER	QTY	DESCRIPTION	REFERENCE DES	CRITICAL	BOM OPTION
118S0481	1	RES,MF,649K,1%,1/20W,0201	R8050	CRITICAL	PBUS:2S
118S00077	1	RES,MF,1.15M,1%,1/16W,0201	R8050	CRITICAL	PBUS:3S
118S00077	1	RES,MF,1.15M,1%,1/16W,0201	R8050	CRITICAL	PBUS:12V

PBUS	Rising Vth	Falling Vth
2S	6.059V	5.636V
3S	9.076V	8.443V
12V	9.076V	8.443V

PAGE TITLE
PMIC GPIOs & Control

Apple Inc.

DRAWING NUMBER 051-02643 SIZE D
REVISION 4.0.0
BRANCH evt-0
PAGE 80 OF 200
SHEET 77 OF 131

NOTICE OF PROPRIETARY PROPERTY:
THE INFORMATION CONTAINED HEREIN IS THE PROPRIETARY PROPERTY OF APPLE INC.
THE POSESSOR AGREES TO THE FOLLOWING:
I TO MAINTAIN THIS DOCUMENT IN CONFIDENCE
II NOT TO REPRODUCE OR COPY IT
III NOT TO REVEAL OR PUBLISH IT IN WHOLE OR PART
IV ALL RIGHTS RESERVED

0.95V VCCIO

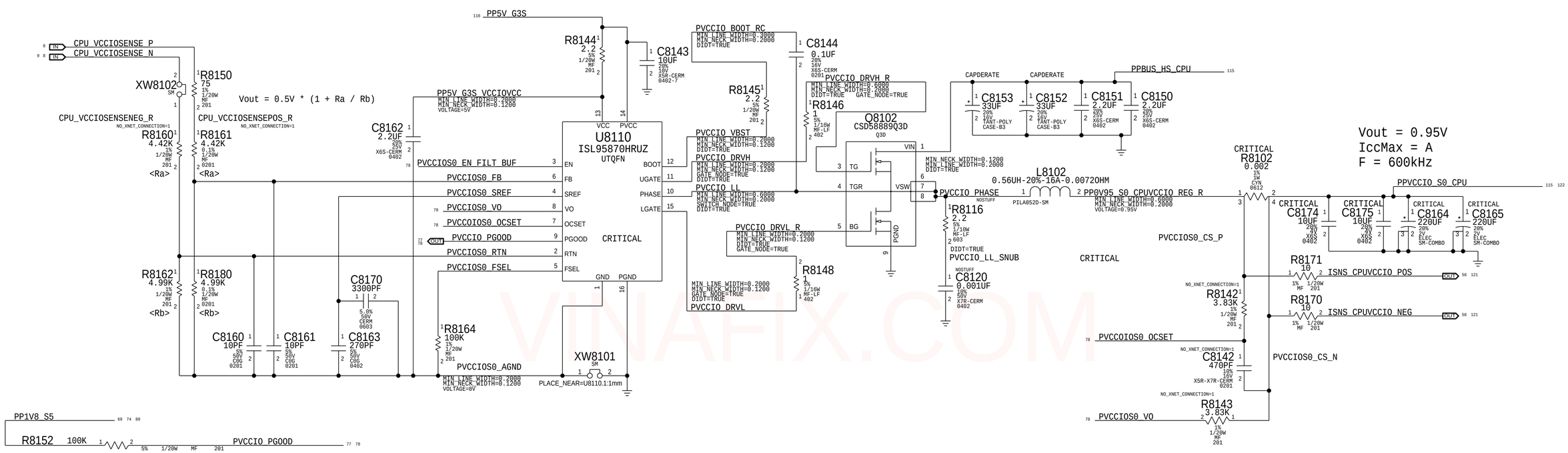

VCCIO ENABLE LOGIC

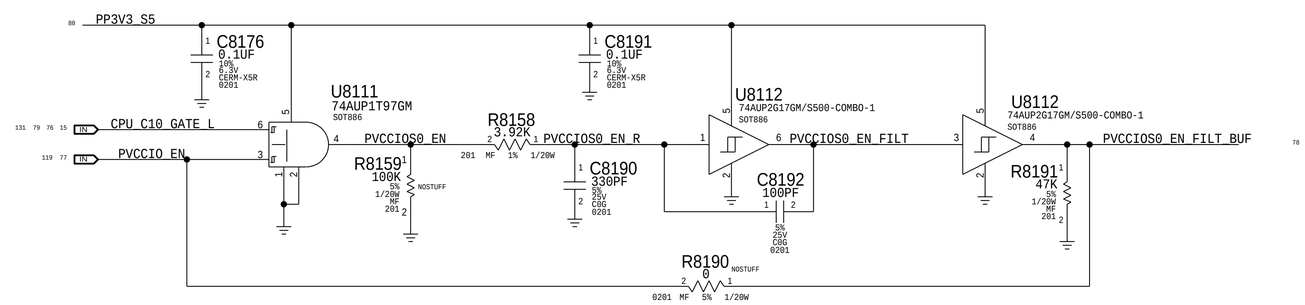

BOM_COST_GROUP=PLATFORM POWER

PAGE TITLE	VR VCCIO
Apple Inc.	DRAWING NUMBER 051-02643 SIZE D
	REVISION 4.0.0
	BRANCH evt-0
	PAGE 81 OF 200
	SHEET 78 OF 131

NOTICE OF PROPRIETARY PROPERTY:
THE INFORMATION CONTAINED HEREIN IS THE PROPRIETARY PROPERTY OF APPLE INC.
THE POSESSOR AGREES TO THE FOLLOWING:
I TO MAINTAIN THIS DOCUMENT IN CONFIDENCE
II NOT TO REPRODUCE OR COPY IT
III NOT TO REVEAL OR PUBLISH IT IN WHOLE OR PART
IV ALL RIGHTS RESERVED

VINAFIX.COM

3.3V G3 Standby Switch X

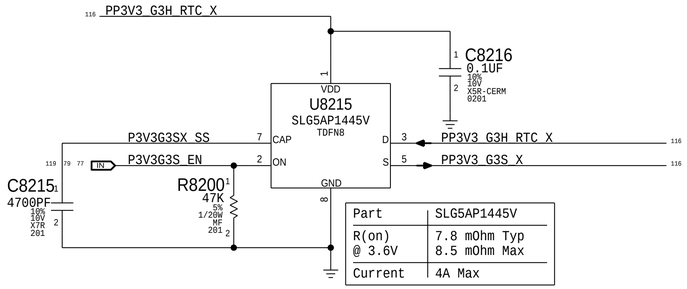

Part	SLG5AP1445V
R(on) @ 3.6V	7.8 mOhm Typ 8.5 mOhm Max
Current	4A Max

3.3V G3 Standby Switch T

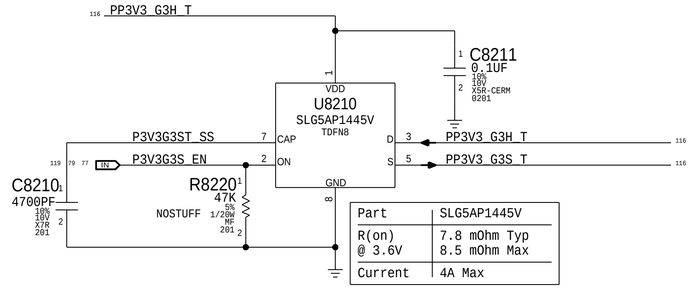

Part	SLG5AP1445V
R(on) @ 3.6V	7.8 mOhm Typ 8.5 mOhm Max
Current	4A Max

1.8V G3 Standby Switch

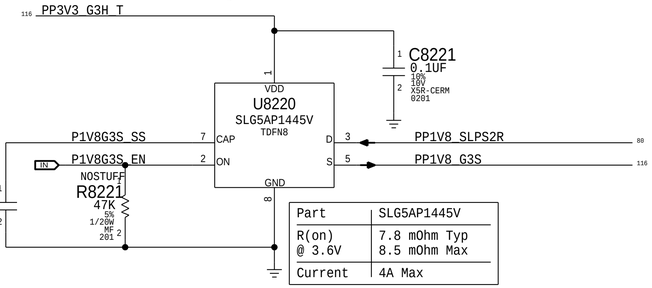

Part	SLG5AP1445V
R(on) @ 3.6V	7.8 mOhm Typ 8.5 mOhm Max
Current	4A Max

1.1V S0SW VCCPLL_OC Switch

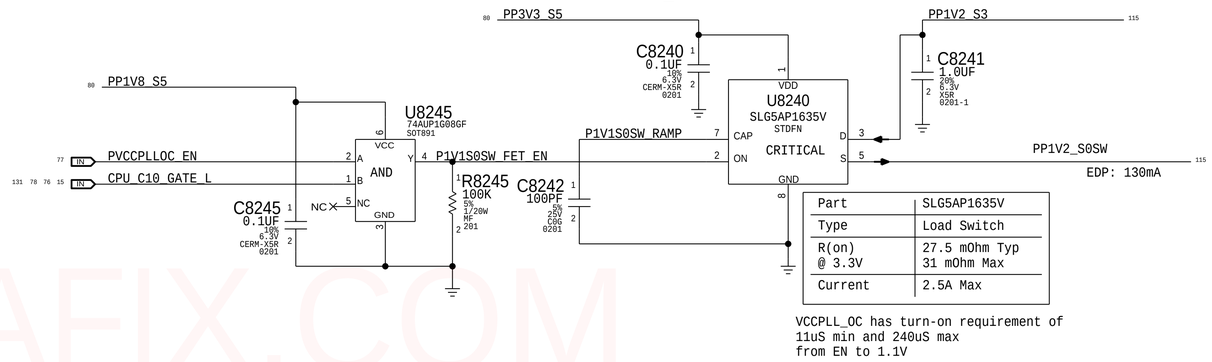

Part	SLG5AP1635V
Type	Load Switch
R(on) @ 3.3V	27.5 mOhm Typ 31 mOhm Max
Current	2.5A Max

VCCPLL_OC has turn-on requirement of
11uS min and 240uS max
from EN to 1.1V

3.3V S0SW TBT X Switch

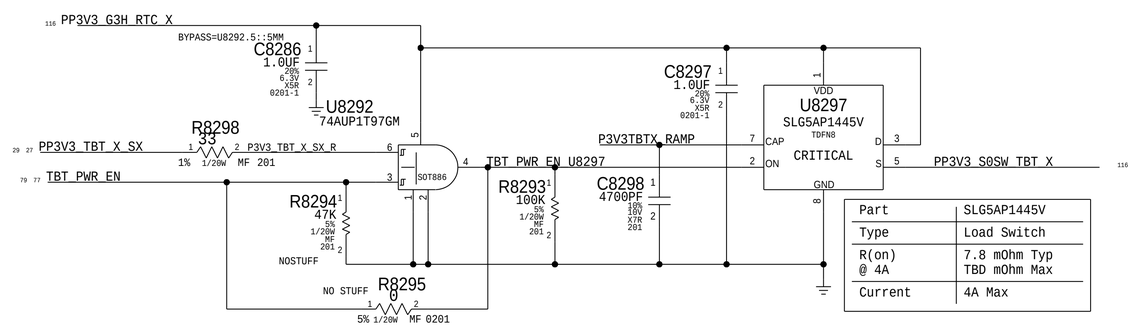

Part	SLG5AP1445V
Type	Load Switch
R(on) @ 4A	7.8 mOhm Typ TBD mOhm Max
Current	4A Max

3.3V S0SW TBT T Switch

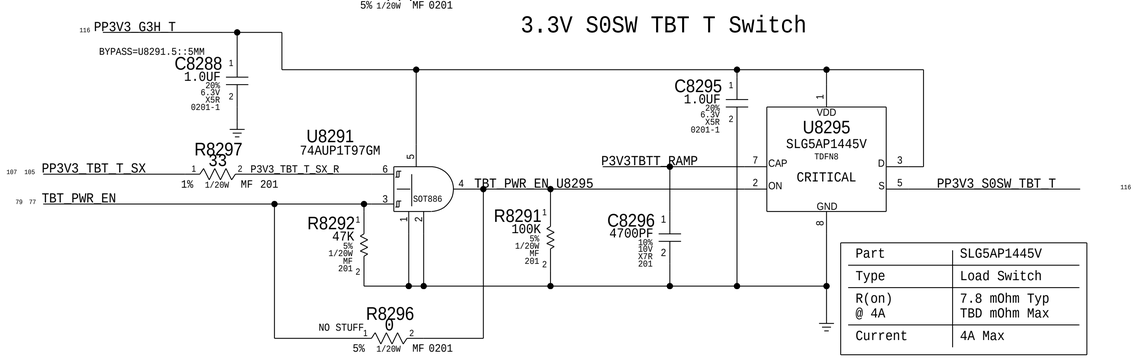

Part	SLG5AP1445V
Type	Load Switch
R(on) @ 4A	7.8 mOhm Typ TBD mOhm Max
Current	4A Max

3.3V Sensor Switch

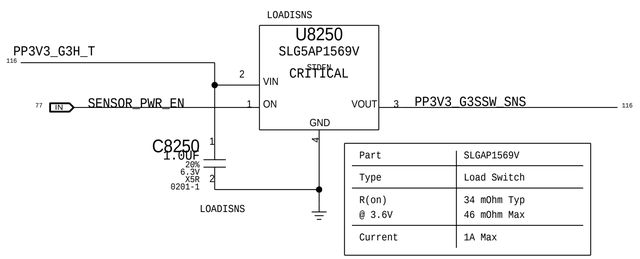

Part	SLGAP1569V
Type	Load Switch
R(on) @ 3.6V	34 mOhm Typ 46 mOhm Max
Current	1A Max

BOM_COST_GROUP=PLATFORM POWER

SYNC_MASTER=SILU

PAGE TITLE: Power FETs

Apple Inc.

NOTICE OF PROPRIETARY PROPERTY:
THE INFORMATION CONTAINED HEREIN IS THE PROPRIETARY PROPERTY OF APPLE INC.
THE POSESSOR AGREES TO THE FOLLOWING:
I TO MAINTAIN THIS DOCUMENT IN CONFIDENCE
II NOT TO REPRODUCE OR COPY IT
III NOT TO REVEAL OR PUBLISH IT IN WHOLE OR PART
IV ALL RIGHTS RESERVED

DRAWING NUMBER	051-02643
SIZE	D
REVISION	4.0.0
BRANCH	evt-0
PAGE	82 OF 200
SHEET	79 OF 131

VINAFIX.COM

8	7	6	5	4	3	2	1

PMIC Buck0 - SoC VDD_CPU

122 75 PPVDDCPU_AWAKE — PPVDDCPU_AWAKE 119
MIN_LINE_WIDTH=0.4000
MIN_NECK_WIDTH=0.1200
VOLTAGE=1.06V
MAKE_BASE=TRUE
PPVDDCPU_AWAKE 42 80

PMIC Buck1 - SoC VDD_CPU_SRAM

122 75 PPVDDCPUSRAM_AWAKE — PPVDDCPUSRAM_AWAKE 119
MIN_LINE_WIDTH=0.4000
MIN_NECK_WIDTH=0.1200
VOLTAGE=1.06V
MAKE_BASE=TRUE
PPVDDCPUSRAM_AWAKE 42

PMIC Buck2 - SoC VDD_SOC

75 PP0V82_SLPDDR — PP0V82_SLPDDR 119
MIN_LINE_WIDTH=0.7000
MIN_NECK_WIDTH=0.1200
VOLTAGE=0.82V
MAKE_BASE=TRUE
PP0V82_SLPDDR 42 80

PMIC BUCK3 - SoC AOP/SMC/VDD1

131 122 75 PP1V8_SLPS2R — PP1V8_SLPS2R 119
MIN_LINE_WIDTH=0.2000
MIN_NECK_WIDTH=0.1200
VOLTAGE=1.8V
MAKE_BASE=TRUE
PP1V8_SLPS2R 75
PP1V8_SLPS2R 79
PP1V8_SLPS2R 76
PP1V8_SLPS2R 46
PP1V8_SLPS2R 77
PP1V8_SLPS2R 64
PP1V8_SLPS2R 46
PP1V8_SLPS2R 38 47
PP1V8_SLPS2R 44
PP1V8_SLPS2R 44
PP1V8_SLPS2R 44
PP1V8_SLPS2R 44
PP1V8_SLPS2R 68
PP1V8_SLPS2R 51
PP1V8_SLPS2R 51
PP1V8_SLPS2R 51
PP1V8_SLPS2R 47
PP1V8_SLPS2R 29 107
PP1V8_SLPS2R 67
PP1V8_SLPS2R 126 131
PP1V8_SLPS2R 107

PMIC BUCK3 SW 1

131 75 PP1V8_AWAKE — PP1V8_AWAKE 119
MIN_LINE_WIDTH=0.2000
MIN_NECK_WIDTH=0.1200
VOLTAGE=1.8V
MAKE_BASE=TRUE
PP1V8_AWAKE 77
PP1V8_AWAKE 46
PP1V8_AWAKE 44
PP1V8_AWAKE 44
PP1V8_AWAKE 44
PP1V8_AWAKE 44
PP1V8_AWAKE 44
PP1V8_AWAKE 41 46 47
PP1V8_AWAKE 46
PP1V8_AWAKE 66
PP1V8_AWAKE 126

PMIC BUCK3 SW 3

75 PP1V8_S5 — PP1V8_S5 119
MIN_LINE_WIDTH=0.2000
MIN_NECK_WIDTH=0.1200
VOLTAGE=1.8V
MAKE_BASE=TRUE
PP1V8_S5 46
PP1V8_S5 16 17
PP1V8_S5 39
PP1V8_S5 12 16
PP1V8_S5 12 13 15 16 19 20 52
PP1V8_S5 15
PP1V8_S5 126
PP1V8_S5 17
PP1V8_S5
PP1V8_S5 12 36 77
PP1V8_S5 51
PP1V8_S5 51
PP1V8_S5 51
PP1V8_S5 46
PP1V8_S5 94
PP1V8_S5
PP1V8_S5 69 74 78
PP1V8_S5 93
PP1V8_S5 79
PP1V8_S5 74
PP1V8_S5 16
PP1V8_S5 57
PP1V8_S5 57
PP1V8_S5 57
PP1V8_S5 46
PP1V8_S5 18

PMIC BUCK3 SW 4/5

75 NC_PP1V8_S3 — NC_PP1V8_S3 MAKE_BASE=TRUE NO_TEST=1
75 NC_PP1V8_S0 — NC_PP1V8_S0 MAKE_BASE=TRUE NO_TEST=1

PMIC Buck4 - SDRAM VDD2

122 75 PP1V1_SLPS2R — PP1V1_SLPS2R 119
MIN_LINE_WIDTH=0.5000
MIN_NECK_WIDTH=0.1200
VOLTAGE=1.1V
MAKE_BASE=TRUE
PP1V1_SLPS2R 76
PP1V1_SLPS2R 76
PP1V1_SLPS2R 43
PP1V1_SLPS2R 44

Buck 4 Ext. SW U7901 - VDDIO_DDR & PLL

76 PP1V1_SLPDDR — PP1V1_SLPDDR 119
MIN_LINE_WIDTH=0.2000
MIN_NECK_WIDTH=0.1200
VOLTAGE=1.1V
MAKE_BASE=TRUE
PP1V1_SLPDDR 38
PP1V1_SLPDDR 43
PP1V1_SLPDDR 43
PP1V1_SLPDDR 44

PMIC Buck5 - VDD_FIXED

122 75 PP0V9_SLPDDR — PP0V9_SLPDDR 119
MIN_LINE_WIDTH=0.3000
MIN_NECK_WIDTH=0.1200
VOLTAGE=0.9V
MAKE_BASE=TRUE
PP0V9_SLPDDR 43
PP0V9_SLPDDR 43
PP0V9_SLPDDR 43
PP0V9_SLPDDR 43
PP0V9_SLPDDR 43

PMIC LDO0 - VDD_LOW

76 PP0V8_SLPS2R — PP0V8_SLPS2R 119
MIN_LINE_WIDTH=0.2000
MIN_NECK_WIDTH=0.1200
VOLTAGE=0.8V
MAKE_BASE=TRUE
PP0V8_SLPS2R 43

PMIC LDO2 - PCIE_REFBUF/PLL

76 PP1V2_AWAKE — PP1V2_AWAKE 119
MIN_LINE_WIDTH=0.2000
MIN_NECK_WIDTH=0.1200
VOLTAGE=1.2V
MAKE_BASE=TRUE
PP1V2_AWAKE 44
PP1V2_AWAKE 44
PP1V2_AWAKE 44
PP1V2_AWAKE 44

PMIC V3P3 SW 1 - USB

76 PP3V3_AWAKE — PP3V3_AWAKE
MIN_LINE_WIDTH=0.2000
MIN_NECK_WIDTH=0.1200
VOLTAGE=3.3V
MAKE_BASE=TRUE
PP3V3_AWAKE 44

PMIC V3P3 SW 2 (Internal) -

76 PP3V3_S5 — PP3V3_S5 119
MIN_LINE_WIDTH=0.6000
MIN_NECK_WIDTH=0.1750
VOLTAGE=3.3V
MAKE_BASE=TRUE
PP3V3_S5 12 16 17
PP3V3_S5 46
PP3V3_S5 78
PP3V3_S5 15 16 19
PP3V3_S5 14 16
PP3V3_S5 15 16
PP3V3_S5 18
PP3V3_S5 20
PP3V3_S5 12 16 17
PP3V3_S5 79
PP3V3_S5 12
PP3V3_S5 93 124
PP3V3_S5 126 131
PP3V3_S5 16
PP3V3_S5

PMIC LDO 1 - PCH VCCRTC

76 PP3V0_G3H_RTC — PP3V0_G3H_RTC 119
MIN_LINE_WIDTH=0.2000
MIN_NECK_WIDTH=0.1200
VOLTAGE=3.0V
MAKE_BASE=TRUE
PP3V0_G3H_RTC 12 16 17

NC Aliases

77 NC_PVCCEOPIOEDRAM_P2V7NAND_PGOOD — MAKE_BASE NO_TEST — NC_PVCCEOPIOEDRAM_P2V7NAND_PGOOD
77 NC_PEARL_P2V7NAND_EN — MAKE_BASE NO_TEST — NC_PEARL_P2V7NAND_EN
77 NC_NAND_DISCHARGE_HDD_PWR_EN — MAKE_BASE NO_TEST — NC_NAND_DISCHARGE_HDD_PWR_EN
77 NC_NAND_RESET_L_SD_PWR_EN — MAKE_BASE NO_TEST — NC_NAND_RESET_L_SD_PWR_EN
77 NC_NAND_WP_L_ENET_PWR_EN — MAKE_BASE NO_TEST — NC_NAND_WP_L_ENET_PWR_EN
77 NC_P3V3G3W_PGOOD — MAKE_BASE NO_TEST — NC_P3V3G3W_PGOOD
77 NC_P3V3G3W_EN — MAKE_BASE NO_TEST — NC_P3V3G3W_EN

Alternate Feedback Sesne

75 OUT PVDDCPUAWAKE_FB (Buck0 - Remote) — NOSTUFF R8320 0, 5%, 1/16W, MF-LF, 402, PLACE_NEAR=R7806.1:5MM — PVDDCPUAWAKE_FB_R — XW8320 SM, PLACE_NEAR=U3900.AA12:4MM — PPVDDCPU_AWAKE 42 80

75 OUT P0V8SLPDDR_FB (Buck2 - Remote) — NOSTUFF R8321 0, 5%, 1/16W, MF-LF, 402, PLACE_NEAR=R7812.1:5MM — P0V8SLPDDR_FB_R — XW8321 SM, PLACE_NEAR=U3900.AA20:6MM — PP0V82_SLPDDR 42 80

75 OUT PVCCPRIMCORE_FB (Buck8 - Remote) — R8322 0, 5%, 1/16W, MF-LF, 402, PLACE_NEAR=R7820.2:5MM — PVCCPRIMCORE_FB_R — XW8322 SM, PLACE_NEAR=U1200.AB12:4MM — PP1V05_PRIM 16 17 115

NC_CHGR_AUX_OK — NO_TEST=1 MAKE_BASE — NC_CHGR_AUX_OK 68
119 18 PM_PWRBTN_L — MAKE_BASE — PM_PWRBTN_L 12 77
119 77 CPUVR_PGOOD — MAKE_BASE — CPUVR_PGOOD 69
46 8 CPU_VCCST_PWRGD — MAKE_BASE — CPU_VCCST_PWRGD 69
NC_PMU_CLK32K — NO_TEST=1 MAKE_BASE — NC_PMU_CLK32K 77
NC_PMU_AMUX_BY — NO_TEST=1 MAKE_BASE — NC_PMU_AMUX_BY 77
NC_PMU_AMUX_AY — NO_TEST=1 MAKE_BASE — NC_PMU_AMUX_AY 77

77 GND — MAKE_BASE
77 GND — MAKE_BASE

PAGE TITLE
SOC/PMIC Aliases

Apple Inc.

DRAWING NUMBER 051-02643 SIZE D
REVISION 4.0.0
BRANCH evt-0

NOTICE OF PROPRIETARY PROPERTY:
THE INFORMATION CONTAINED HEREIN IS THE PROPRIETARY PROPERTY OF APPLE INC.
THE POSESSOR AGREES TO THE FOLLOWING:
I TO MAINTAIN THIS DOCUMENT IN CONFIDENCE
II NOT TO REPRODUCE OR COPY IT
III NOT TO REVEAL OR PUBLISH IT IN WHOLE OR PART
IV ALL RIGHTS RESERVED

VINAFIX.COM

8	7	6	5	4	3	2	1

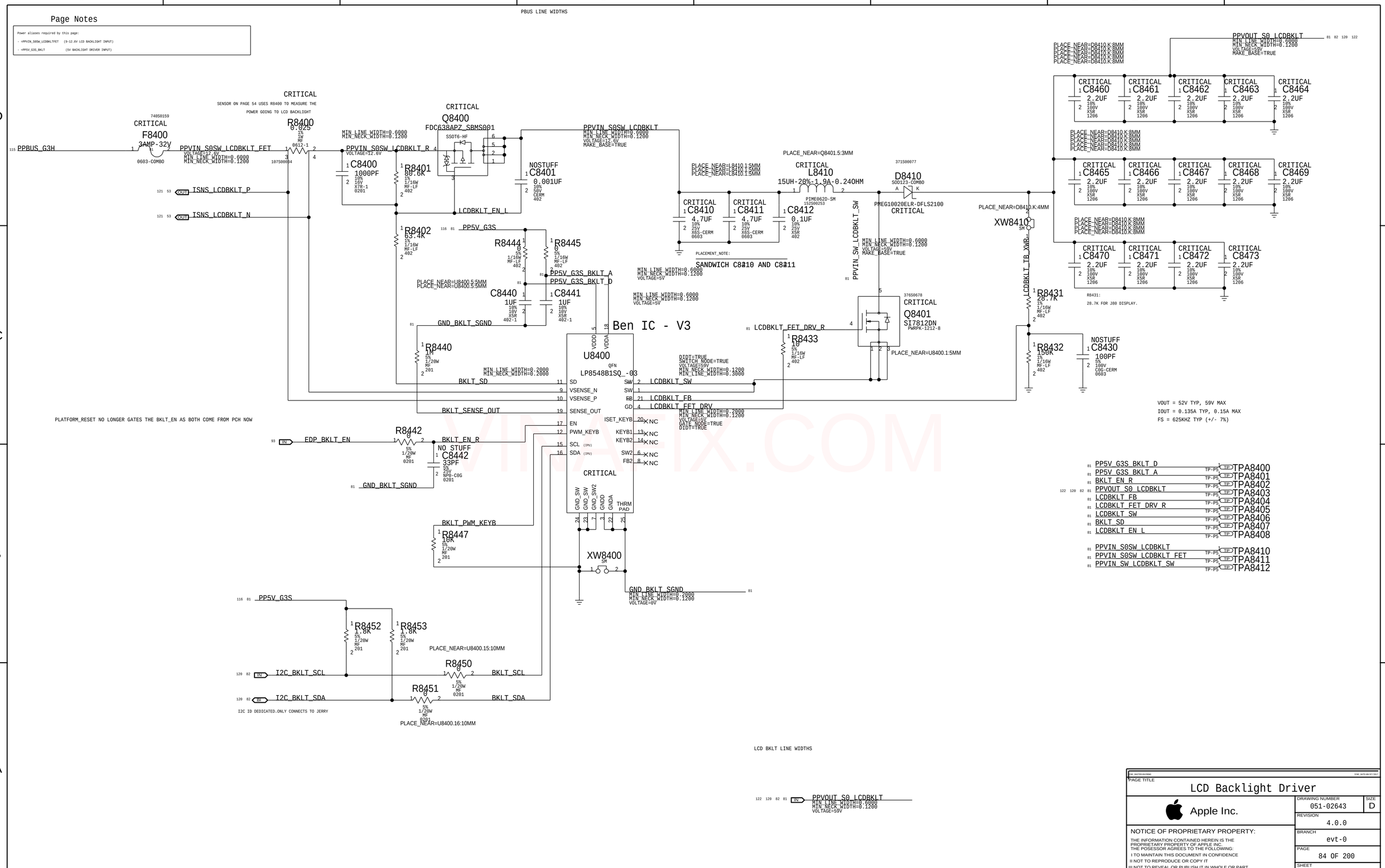
Page Notes
Power aliases required by this page:
- =PPVIN_S0SW_LCDBKLTFET (8-12.6V LCD BACKLIGHT INPUT)
- =PP5V_G3S_BKLT (5V BACKLIGHT DRIVER INPUT)
PBUS LINE WIDTHS
PPBUS_G3H
F8400
3AMP-32V
0603-COMBO
PPVIN_S0SW_LCDBKLT_FET
VOLTAGE=12.6V
MIN_LINE_WIDTH=0.6000
MIN_NECK_WIDTH=0.1200
CRITICAL
SENSOR ON PAGE 54 USES R8400 TO MEASURE THE
POWER GOING TO LCD BACKLIGHT
R8400
0.025
1% 1W MF
0612-1
107500034
C8400
1000PF
10% 10V X7R-1 0201
R8401
80.6K
1% 1/16W MF-LF 402
Q8400
FDC638APZ_SBMS001
SSOT6-HF
NOSTUFF
C8401
0.001UF
10% 50V CERM 402
PPVIN_S0SW_LCDBKLT
MIN_LINE_WIDTH=0.6000
MIN_NECK_WIDTH=0.1200
VOLTAGE=12.6V
MAKE_BASE=TRUE
ISNS_LCDBKLT_P
ISNS_LCDBKLT_N
LCDBKLT_EN_L
R8402
93.4K
1% 1/16W MF-LF 402
PP5V_G3S
R8444
0
5% 1/16W MF-LF 402
R8445
0
5% 1/16W MF-LF 402
PP5V_G3S_BKLT_A
PP5V_G3S_BKLT_D
PLACE_NEAR=U8400.5:5MM
C8440
1UF
10% 10V X5R 402-1
C8441
1UF
10% 10V X5R 402-1
GND_BKLT_SGND
R8440
1M
5% 1/20W MF 201
MIN_LINE_WIDTH=0.2000
MIN_NECK_WIDTH=0.2000
BKLT_SD
BKLT_SENSE_OUT
Ben IC - V3
U8400
QFN
LP8548B1SQ_-03
VDDD
VDDA
SD
VSENSE_N
VSENSE_P
SENSE_OUT
EN
PWM_KEYB
SCL (IPU)
SDA (IPU)
SW
FB
GD
ISET_KEYB
KEYB1
KEYB2
SW2
FB2
NC
GND_SW
GND_SW2
GNDD
GNDA
THRM PAD
LCDBKLT_SW
LCDBKLT_FB
LCDBKLT_FET_DRV
DIDT=TRUE
SWITCH_NODE=TRUE
VOLTAGE=59V
MIN_NECK_WIDTH=0.1200
MIN_LINE_WIDTH=0.3000
MIN_LINE_WIDTH=0.2000
MIN_NECK_WIDTH=0.1200
VOLTAGE=5V
GATE_NODE=TRUE
DIDT=TRUE
PLATFORM_RESET NO LONGER GATES THE BKLT_EN AS BOTH COME FROM PCH NOW
EDP_BKLT_EN
R8442
0
5% 1/20W MF 0201
BKLT_EN_R
NO STUFF
C8442
33PF
5% 25V NP0-C0G 0201
GND_BKLT_SGND
BKLT_PWM_KEYB
R8447
10K
5% 1/20W MF 201
XW8400
SM
GND_BKLT_SGND
MIN_LINE_WIDTH=0.2000
MIN_NECK_WIDTH=0.1200
VOLTAGE=0V
PP5V_G3S
R8452
1.8K
5% 1/20W MF 201
R8453
1.8K
5% 1/20W MF 201
PLACE_NEAR=U8400.15:10MM
I2C_BKLT_SCL
I2C_BKLT_SDA
R8450
0
5% 1/20W MF 0201
R8451
0
5% 1/20W MF 0201
BKLT_SCL
BKLT_SDA
I2C ID DEDICATED.ONLY CONNECTS TO JERRY
PLACE_NEAR=U8400.16:10MM
PLACE_NEAR=Q8401.5:3MM
CRITICAL
L8410
15UH-20%-1.9A-0.240HM
PIME062D-SM
152500253
D8410
SOD123-COMBO
371500077
PMEG10020ELR-DFLS2100
CRITICAL
C8410
4.7UF
10% 25V X6S-CERM 0603
C8411
4.7UF
10% 25V X6S-CERM 0603
C8412
0.1UF
10% 25V X5R 402
PLACEMENT_NOTE:
SANDWICH C8410 AND C8411
PPVIN_SW_LCDBKLT_SW
MIN_LINE_WIDTH=0.6000
MIN_NECK_WIDTH=0.1200
VOLTAGE=50V
MAKE_BASE=TRUE
LCDBKLT_FET_DRV_R
R8433
10
5% 1/16W MF-LF 402
Q8401
SI7812DN
PWRPK-1212-8
37650678
PLACE_NEAR=U8400.1:5MM
PLACE_NEAR=D8410.K:4MM
XW8410
SM
LCDBKLT_TB_XWR
R8431
28.7K
1% 1/16W MF-LF 402
R8431:
28.7K FOR J80 DISPLAY.
R8432
150K
1% 1/16W MF-LF 402
NOSTUFF
C8430
100PF
5% 100V C0G-CERM 0603
PPVOUT_S0_LCDBKLT
MIN_LINE_WIDTH=0.6000
MIN_NECK_WIDTH=0.1200
VOLTAGE=59V
MAKE_BASE=TRUE
PLACE_NEAR=D8410.K:8MM
C8460
C8461
C8462
C8463
C8464
C8465
C8466
C8467
C8468
C8469
C8470
C8471
C8472
C8473
2.2UF
10% 100V X5R 1206
VOUT = 52V TYP, 59V MAX
IOUT = 0.135A TYP, 0.15A MAX
FS = 625KHZ TYP (+/- 7%)
PP5V_G3S_BKLT_D
PP5V_G3S_BKLT_A
BKLT_EN_R
PPVOUT_S0_LCDBKLT
LCDBKLT_FB
LCDBKLT_FET_DRV_R
LCDBKLT_SW
BKLT_SD
LCDBKLT_EN_L
PPVIN_S0SW_LCDBKLT
PPVIN_S0SW_LCDBKLT_FET
PPVIN_SW_LCDBKLT_SW
TPA8400
TPA8401
TPA8402
TPA8403
TPA8404
TPA8405
TPA8406
TPA8407
TPA8408
TPA8410
TPA8411
TPA8412
LCD BKLT LINE WIDTHS
PPVOUT_S0_LCDBKLT
MIN_LINE_WIDTH=0.6000
MIN_NECK_WIDTH=0.1200
VOLTAGE=59V
BOM_COST_GROUP=DISPLAY
PAGE TITLE
LCD Backlight Driver
Apple Inc.
DRAWING NUMBER
051-02643
SIZE
D
REVISION
4.0.0
BRANCH
evt-0
PAGE
84 OF 200
SHEET
81 OF 131
NOTICE OF PROPRIETARY PROPERTY:
THE INFORMATION CONTAINED HEREIN IS THE PROPRIETARY PROPERTY OF APPLE INC.
THE POSESSOR AGREES TO THE FOLLOWING:
I TO MAINTAIN THIS DOCUMENT IN CONFIDENCE
II NOT TO REPRODUCE OR COPY IT
III NOT TO REVEAL OR PUBLISH IT IN WHOLE OR PART
IV ALL RIGHTS RESERVED

LCD PANEL INTERFACE (eDP) + Camera (MIPI)

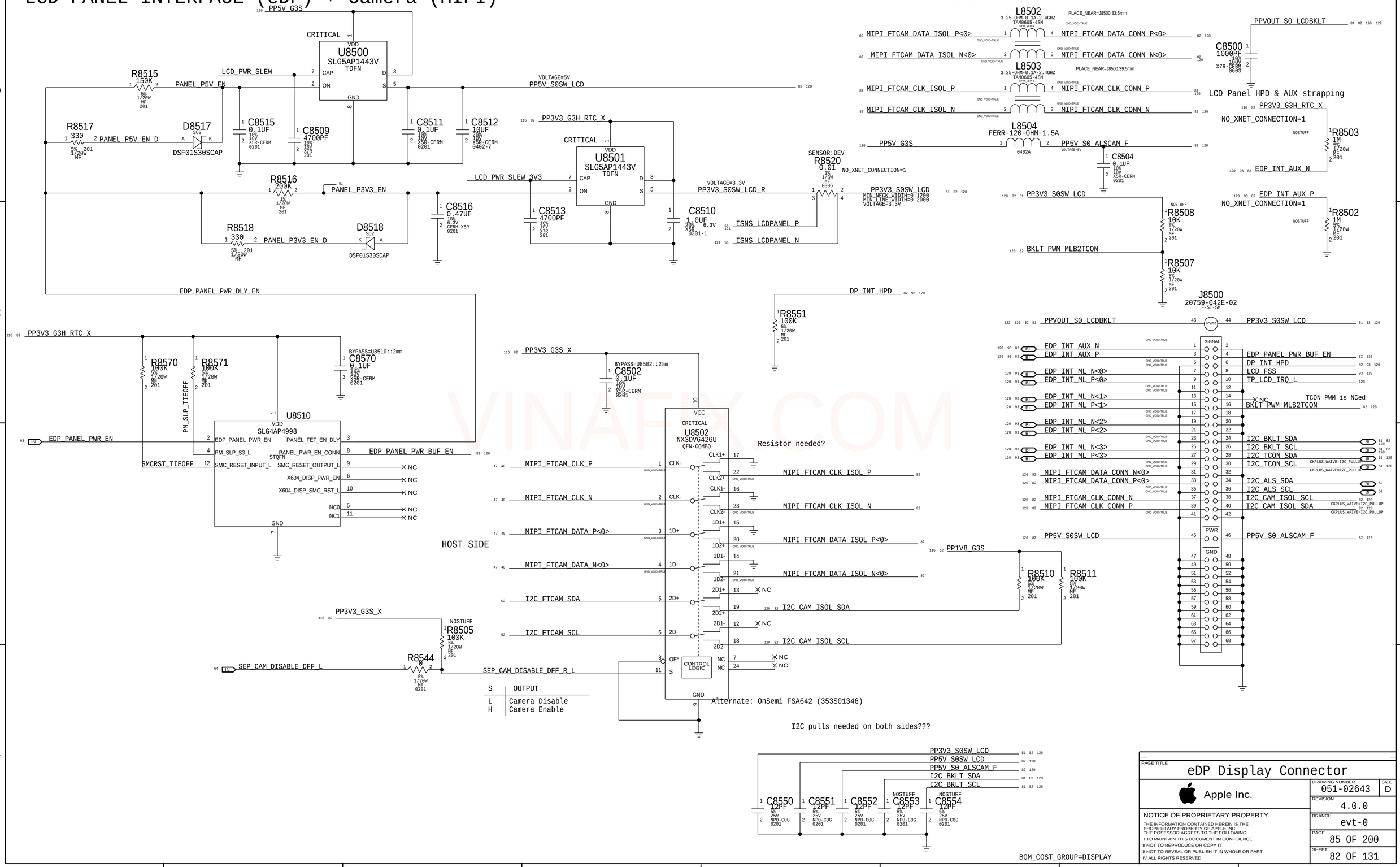

VINAFIX.COM

PAGE TITLE
eDP Display Connector

Apple Inc.

DRAWING NUMBER 051-02643 SIZE D
REVISION 4.0.0
BRANCH evt-0
PAGE 85 OF 200
SHEET 82 OF 131

NOTICE OF PROPRIETARY PROPERTY:
THE INFORMATION CONTAINED HEREIN IS THE PROPRIETARY PROPERTY OF APPLE INC.
THE POSESSOR AGREES TO THE FOLLOWING:
I TO MAINTAIN THIS DOCUMENT IN CONFIDENCE
II NOT TO REPRODUCE OR COPY IT
III NOT TO REVEAL OR PUBLISH IT IN WHOLE OR PART
IV ALL RIGHTS RESERVED

S4E0

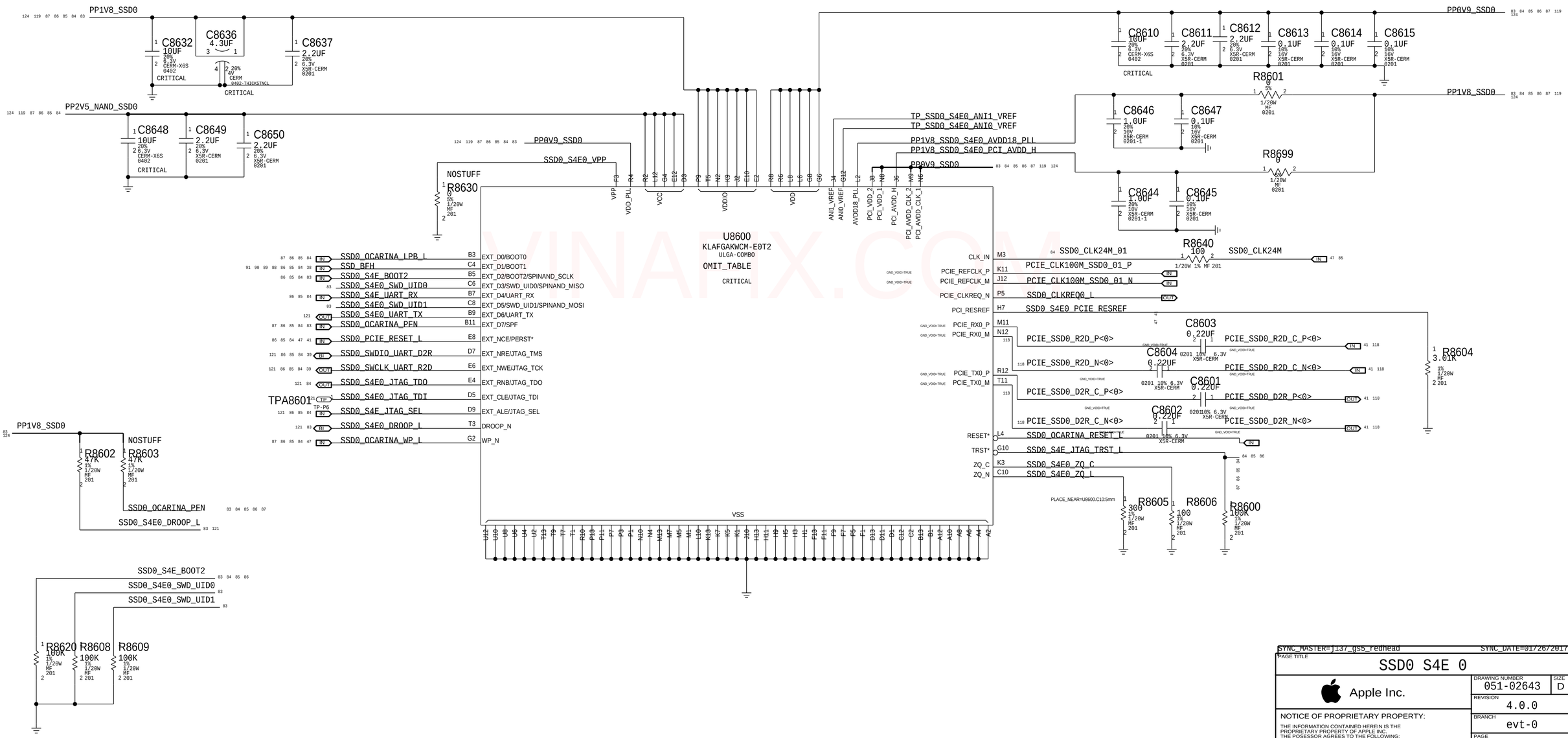

VINAFIX.COM

SYNC_MASTER=J137_gs5_redhead SYNC_DATE=01/26/2017

PAGE TITLE

SSD0 S4E 0

Apple Inc.

DRAWING NUMBER 051-02643 SIZE D

REVISION 4.0.0

BRANCH evt-0

PAGE 86 OF 200

SHEET 83 OF 131

NOTICE OF PROPRIETARY PROPERTY:
THE INFORMATION CONTAINED HEREIN IS THE PROPRIETARY PROPERTY OF APPLE INC.
THE POSESSOR AGREES TO THE FOLLOWING:
I TO MAINTAIN THIS DOCUMENT IN CONFIDENCE
II NOT TO REPRODUCE OR COPY IT
III NOT TO REVEAL OR PUBLISH IT IN WHOLE OR PART
IV ALL RIGHTS RESERVED

S4E1

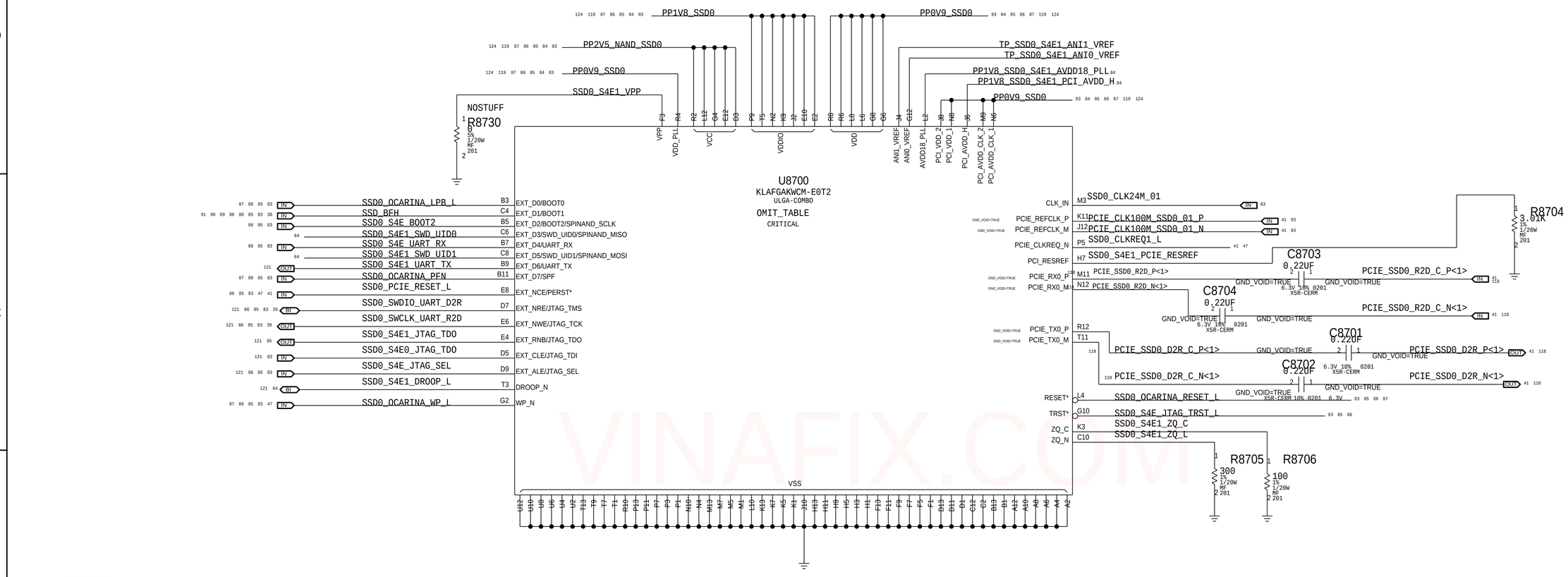

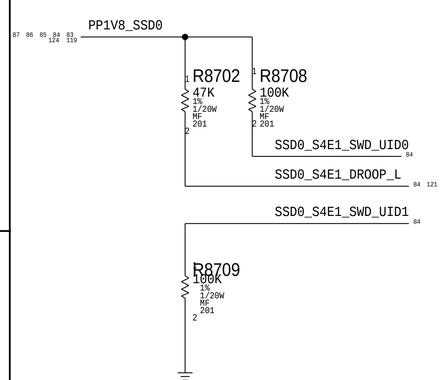

S4E VDD

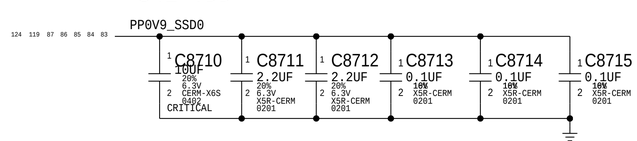

S4E VDDIO

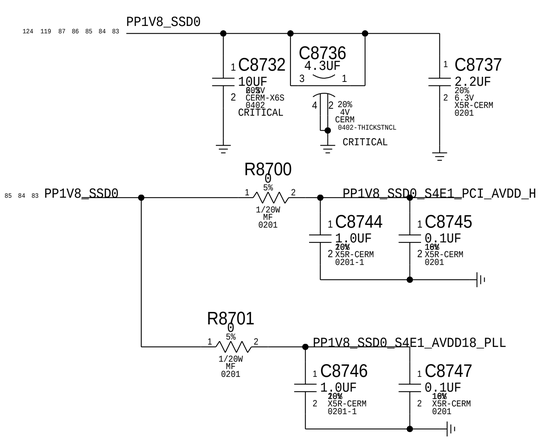

VCC CAP

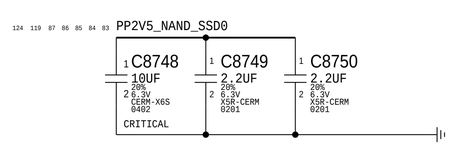

BOM_COST_GROUP=SDD

VINAFIX.COM

SYNC_MASTER=J137_gs5_redhead SYNC_DATE=01/26/2017

PAGE TITLE: SSD0 S4E 1

Apple Inc.

DRAWING NUMBER: 051-02643 SIZE: D

REVISION: 4.0.0

BRANCH: evt-0

PAGE: 87 OF 200

SHEET: 84 OF 131

NOTICE OF PROPRIETARY PROPERTY:
THE INFORMATION CONTAINED HEREIN IS THE PROPRIETARY PROPERTY OF APPLE INC.
THE POSESSOR AGREES TO THE FOLLOWING:
I TO MAINTAIN THIS DOCUMENT IN CONFIDENCE
II NOT TO REPRODUCE OR COPY IT
III NOT TO REVEAL OR PUBLISH IT IN WHOLE OR PART
IV ALL RIGHTS RESERVED

S4E2

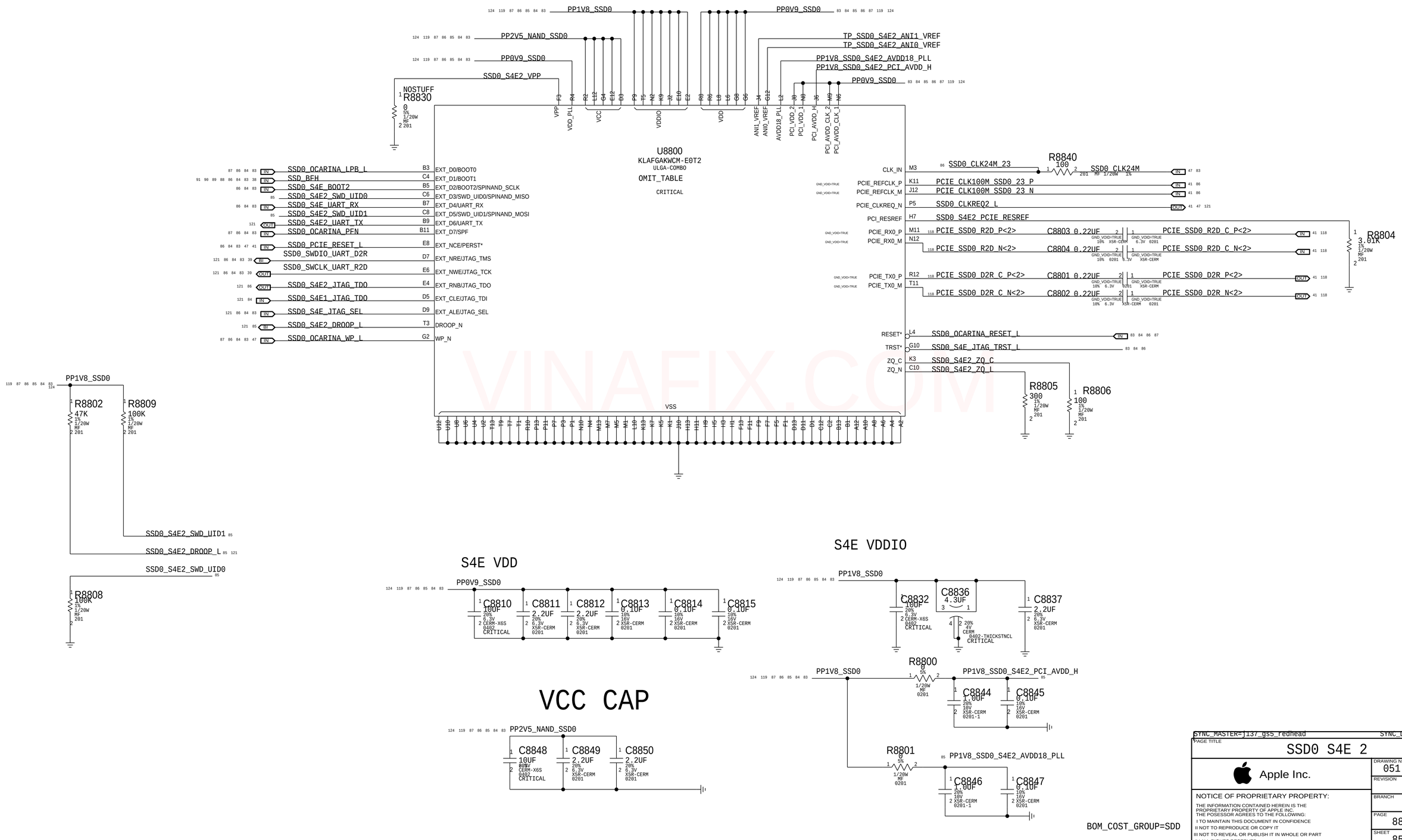

BOM_COST_GROUP=SDD

SYNC_MASTER=j137_gs5_redhead SYNC_DATE=01/26/2017

PAGE TITLE
SSD0 S4E 2

Apple Inc.

DRAWING NUMBER 051-02643 SIZE D

REVISION 4.0.0

BRANCH evt-0

PAGE 88 OF 200

SHEET 85 OF 131

NOTICE OF PROPRIETARY PROPERTY:
THE INFORMATION CONTAINED HEREIN IS THE PROPRIETARY PROPERTY OF APPLE INC.
THE POSESSOR AGREES TO THE FOLLOWING:
I TO MAINTAIN THIS DOCUMENT IN CONFIDENCE
II NOT TO REPRODUCE OR COPY IT
III NOT TO REVEAL OR PUBLISH IT IN WHOLE OR PART
IV ALL RIGHTS RESERVED

VINAFIX.COM

S4E3

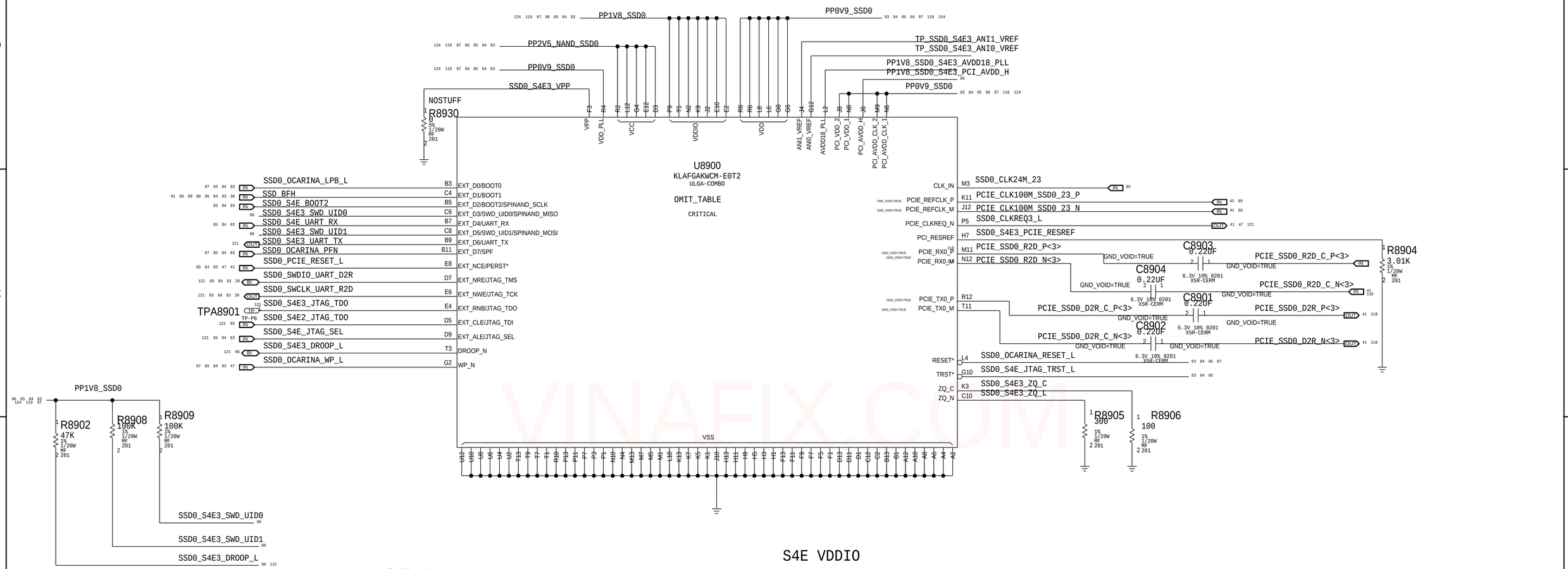

BOM_COST_GROUP=SDD

SYNC_MASTER=J137_gs5_redhead SYNC_DATE=01/26/2017

PAGE TITLE
SSD0 S4E 3

Apple Inc.

DRAWING NUMBER 051-02643 SIZE D

REVISION 4.0.0

BRANCH evt-0

PAGE 89 OF 200

SHEET 86 OF 131

NOTICE OF PROPRIETARY PROPERTY:
THE INFORMATION CONTAINED HEREIN IS THE PROPRIETARY PROPERTY OF APPLE INC.
THE POSESSOR AGREES TO THE FOLLOWING:
I TO MAINTAIN THIS DOCUMENT IN CONFIDENCE
II NOT TO REPRODUCE OR COPY IT
III NOT TO REVEAL OR PUBLISH IT IN WHOLE OR PART
IV ALL RIGHTS RESERVED

VINAFIX.COM

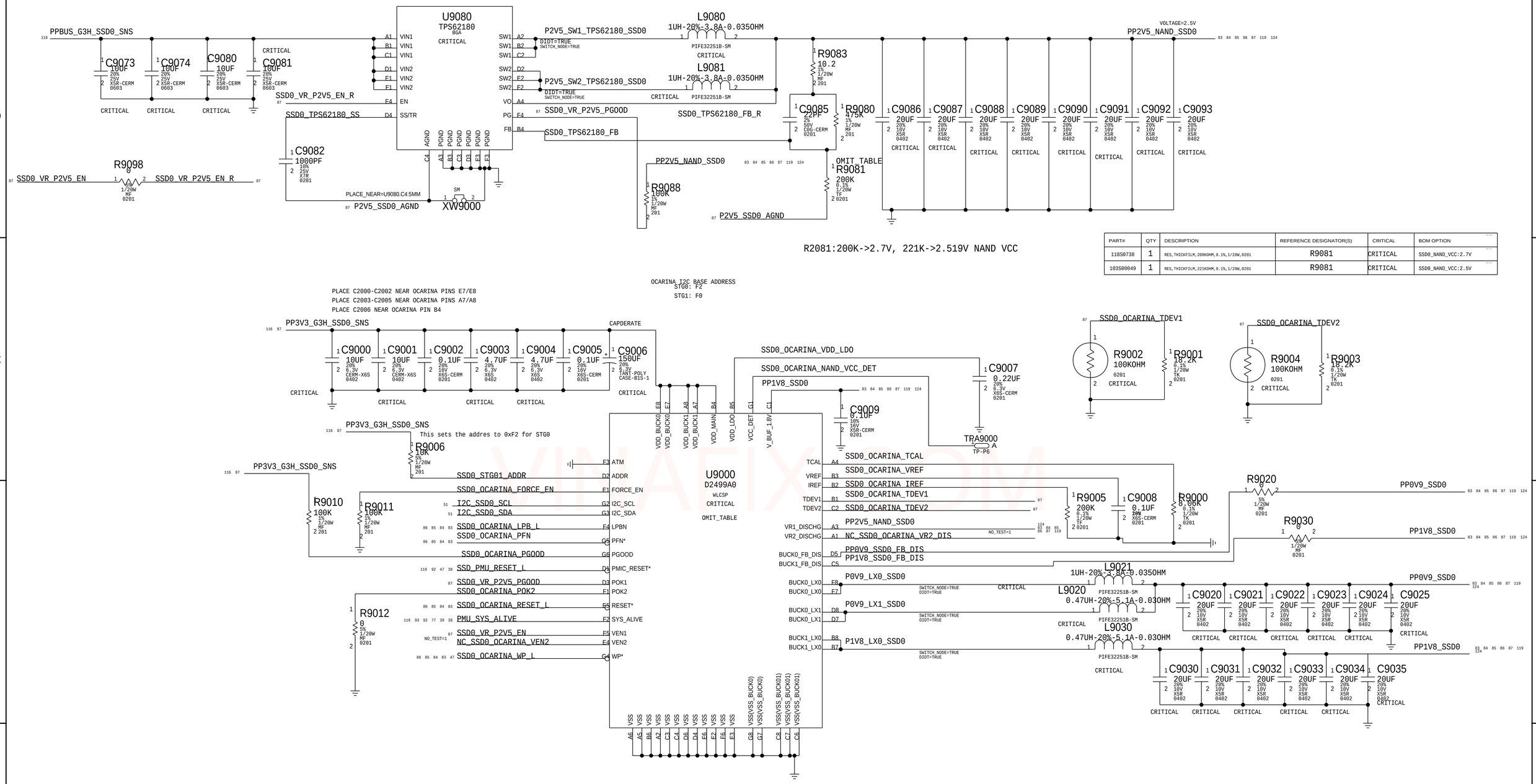

PART#	QTY	DESCRIPTION	REFERENCE DESIGNATOR(S)	CRITICAL	BOM OPTION
118S0738	1	RES,THICKFILM,200KOHM,0.1%,1/20W,0201	R9081	CRITICAL	SSD0_NAND_VCC:2.7V
103S00049	1	RES,THICKFILM,221KOHM,0.1%,1/20W,0201	R9081	CRITICAL	SSD0_NAND_VCC:2.5V

SYNC_MASTER=j137_gs5_redhead SYNC_DATE=01/26/2017

PAGE TITLE
SSD0 PMIC & VR

Apple Inc.

DRAWING NUMBER 051-02643 SIZE D
REVISION 4.0.0
BRANCH evt-0
PAGE 90 OF 200
SHEET 87 OF 131

NOTICE OF PROPRIETARY PROPERTY:
THE INFORMATION CONTAINED HEREIN IS THE PROPRIETARY PROPERTY OF APPLE INC.
THE POSESSOR AGREES TO THE FOLLOWING:
I TO MAINTAIN THIS DOCUMENT IN CONFIDENCE
II NOT TO REPRODUCE OR COPY IT
III NOT TO REVEAL OR PUBLISH IT IN WHOLE OR PART
IV ALL RIGHTS RESERVED

S4E0

VCC CAP

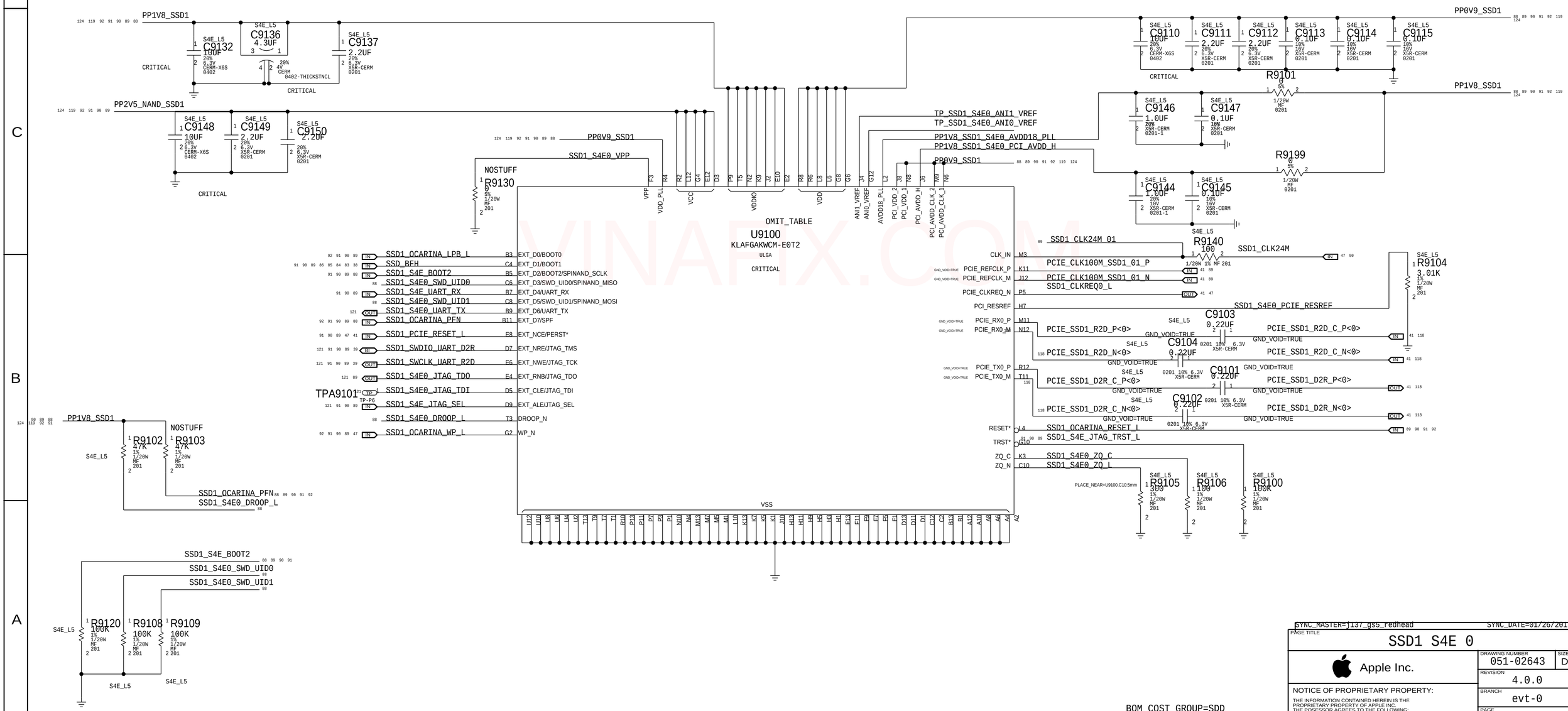

BOM_COST_GROUP=SDD

SYNC_MASTER=j137_gs5_redhead SYNC_DATE=01/26/2017

PAGE TITLE	SSD1 S4E 0
Apple Inc.	DRAWING NUMBER 051-02643 SIZE D
	REVISION 4.0.0
NOTICE OF PROPRIETARY PROPERTY: THE INFORMATION CONTAINED HEREIN IS THE PROPRIETARY PROPERTY OF APPLE INC. THE POSESSOR AGREES TO THE FOLLOWING: I TO MAINTAIN THIS DOCUMENT IN CONFIDENCE II NOT TO REPRODUCE OR COPY IT III NOT TO REVEAL OR PUBLISH IT IN WHOLE OR PART IV ALL RIGHTS RESERVED	BRANCH evt-0
	PAGE 91 OF 200
	SHEET 88 OF 131

VINAFIX.COM

S4E1

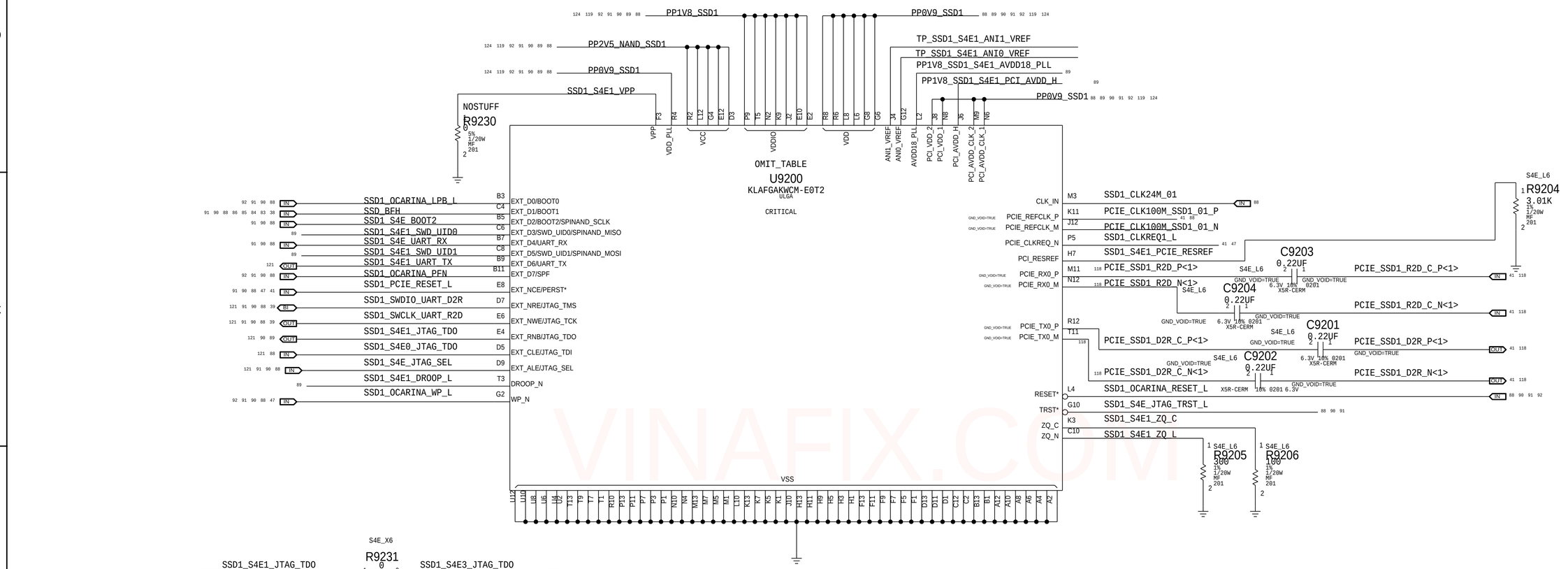

VINAFIX.COM

SYNC_MASTER=j137_gs5_redhead SYNC_DATE=01/26/2017

PAGE TITLE
SSD1 S4E 1

Apple Inc.

DRAWING NUMBER 051-02643 SIZE D
REVISION 4.0.0
BRANCH evt-0
PAGE 92 OF 200
SHEET 89 OF 131

NOTICE OF PROPRIETARY PROPERTY:
THE INFORMATION CONTAINED HEREIN IS THE PROPRIETARY PROPERTY OF APPLE INC.
THE POSESSOR AGREES TO THE FOLLOWING:
I TO MAINTAIN THIS DOCUMENT IN CONFIDENCE
II NOT TO REPRODUCE OR COPY IT
III NOT TO REVEAL OR PUBLISH IT IN WHOLE OR PART
IV ALL RIGHTS RESERVED

S4E2

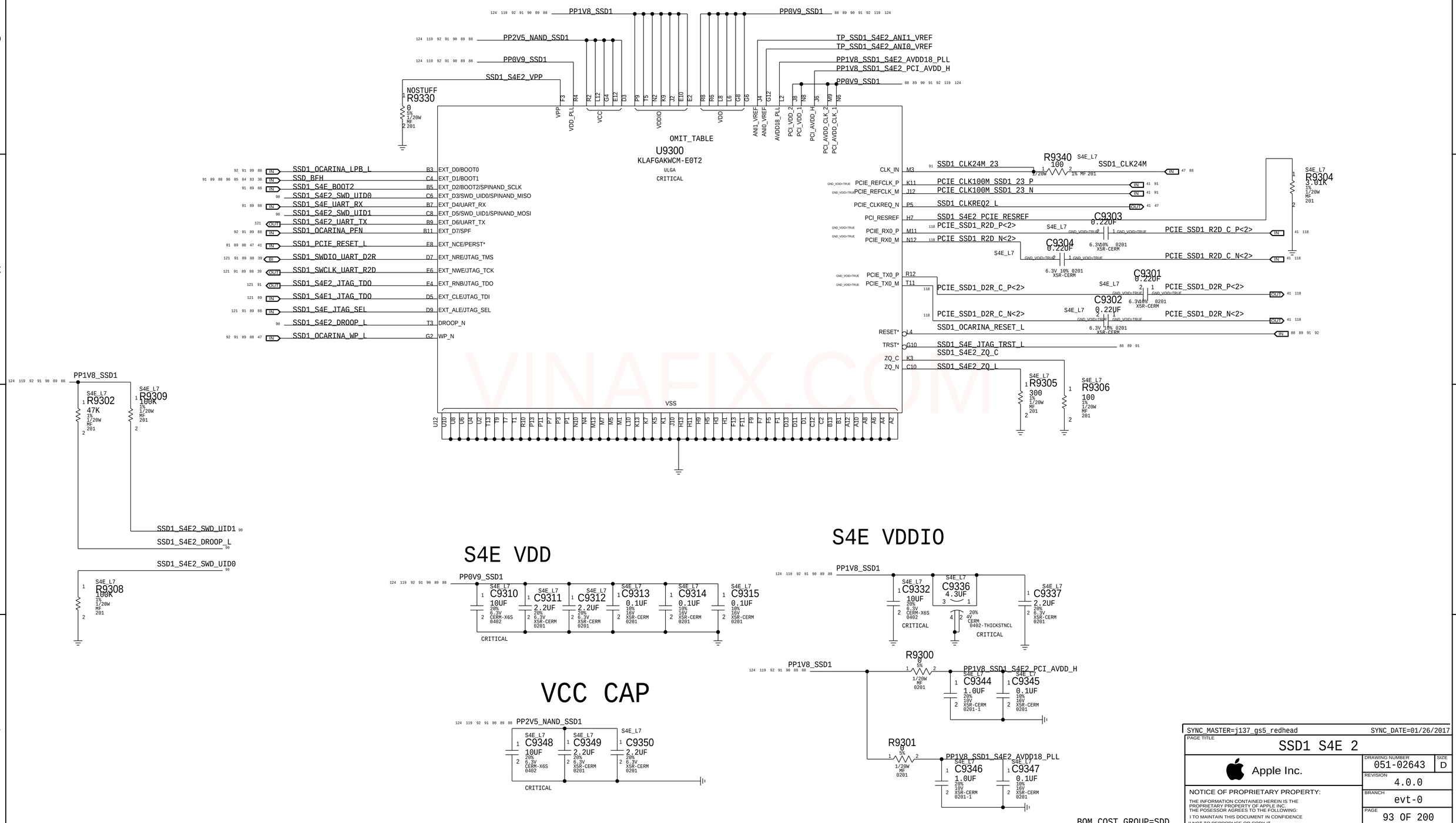

VINAFIX.COM

SYNC_MASTER=j137_gs5_redhead SYNC_DATE=01/26/2017

PAGE TITLE
SSD1 S4E 2

Apple Inc.

DRAWING NUMBER 051-02643 SIZE D
REVISION 4.0.0
BRANCH evt-0
PAGE 93 OF 200
SHEET 90 OF 131

NOTICE OF PROPRIETARY PROPERTY:
THE INFORMATION CONTAINED HEREIN IS THE PROPRIETARY PROPERTY OF APPLE INC.
THE POSESSOR AGREES TO THE FOLLOWING:
I TO MAINTAIN THIS DOCUMENT IN CONFIDENCE
II NOT TO REPRODUCE OR COPY IT
III NOT TO REVEAL OR PUBLISH IT IN WHOLE OR PART
IV ALL RIGHTS RESERVED

S4E3

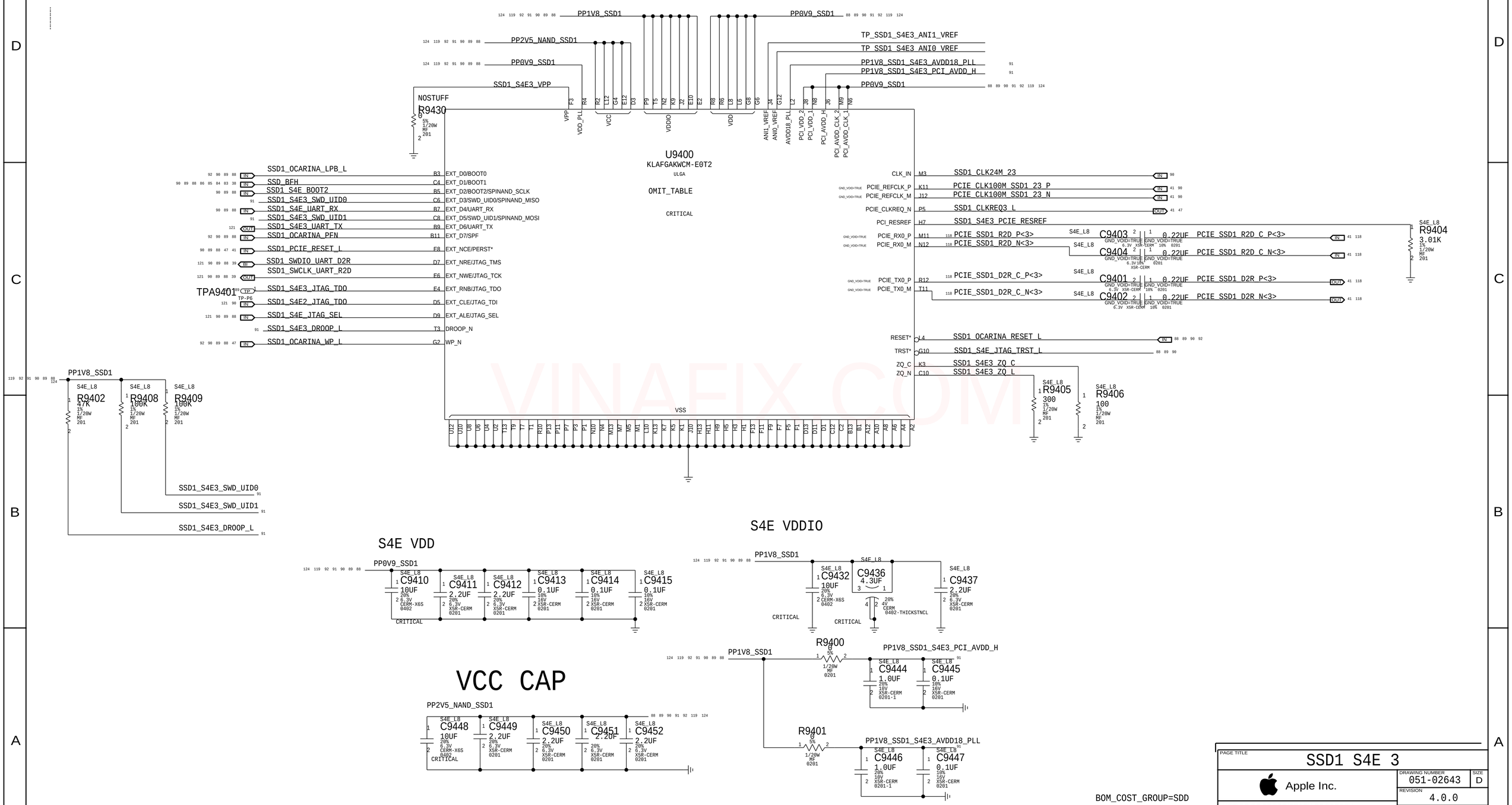

VINAFIX.COM

PAGE TITLE: SSD1 S4E 3

Apple Inc.

DRAWING NUMBER: 051-02643 SIZE: D

REVISION: 4.0.0

BRANCH: evt-0

PAGE: 94 OF 200

SHEET: 91 OF 131

NOTICE OF PROPRIETARY PROPERTY:
THE INFORMATION CONTAINED HEREIN IS THE PROPRIETARY PROPERTY OF APPLE INC.
THE POSESSOR AGREES TO THE FOLLOWING:
I TO MAINTAIN THIS DOCUMENT IN CONFIDENCE
II NOT TO REPRODUCE OR COPY IT
III NOT TO REVEAL OR PUBLISH IT IN WHOLE OR PART
IV ALL RIGHTS RESERVED

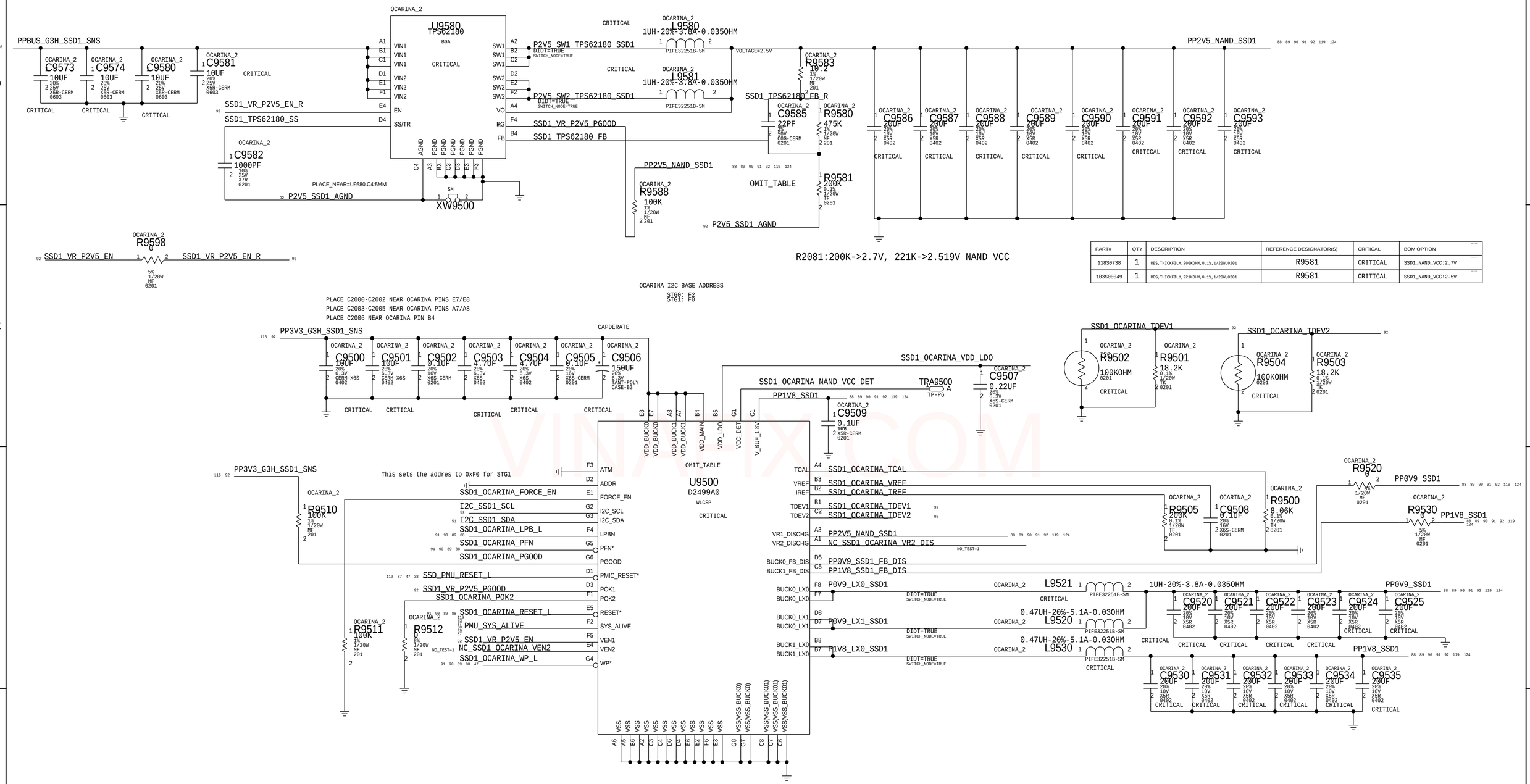

PART#	QTY	DESCRIPTION	REFERENCE DESIGNATOR(S)	CRITICAL	BOM OPTION
118S0738	1	RES,THICKFILM,200KOHM,0.1%,1/20W,0201	R9581	CRITICAL	SSD1_NAND_VCC:2.7V
103S00049	1	RES,THICKFILM,221KOHM,0.1%,1/20W,0201	R9581	CRITICAL	SSD1_NAND_VCC:2.5V

VINAFIX.COM

PAGE TITLE
SSD1 PMIC & VR

Apple Inc.

DRAWING NUMBER 051-02643
SIZE D
REVISION 4.0.0
BRANCH evt-0
PAGE 95 OF 200
SHEET 92 OF 131

NOTICE OF PROPRIETARY PROPERTY:
THE INFORMATION CONTAINED HEREIN IS THE PROPRIETARY PROPERTY OF APPLE INC.
THE POSESSOR AGREES TO THE FOLLOWING:
I TO MAINTAIN THIS DOCUMENT IN CONFIDENCE
II NOT TO REPRODUCE OR COPY IT
III NOT TO REVEAL OR PUBLISH IT IN WHOLE OR PART
IV ALL RIGHTS RESERVED

GMUX GPIO Expander

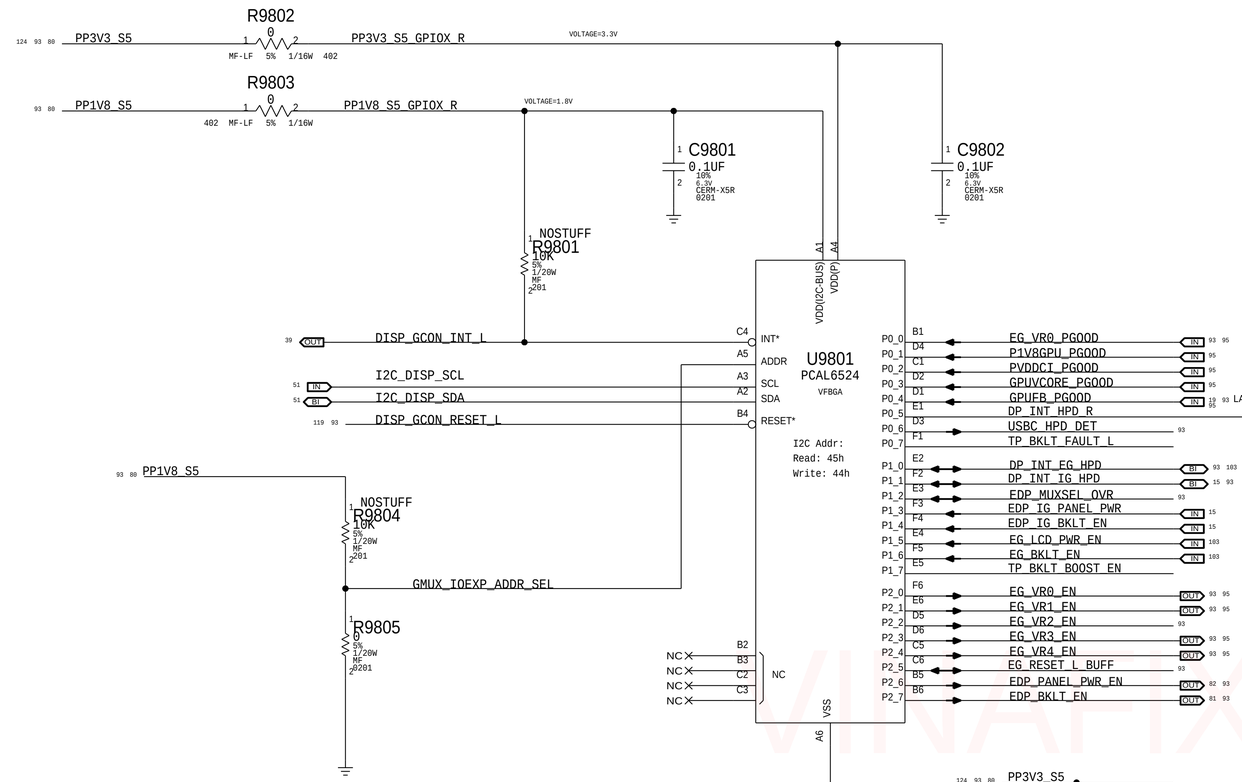

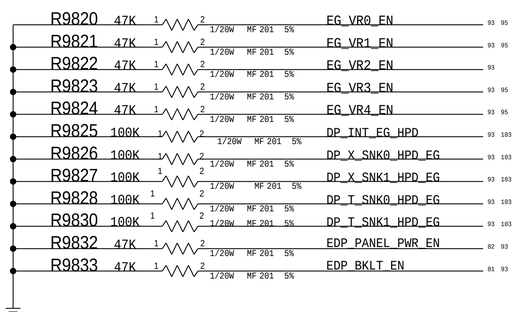

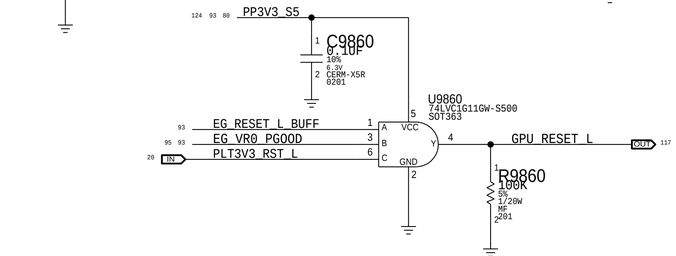

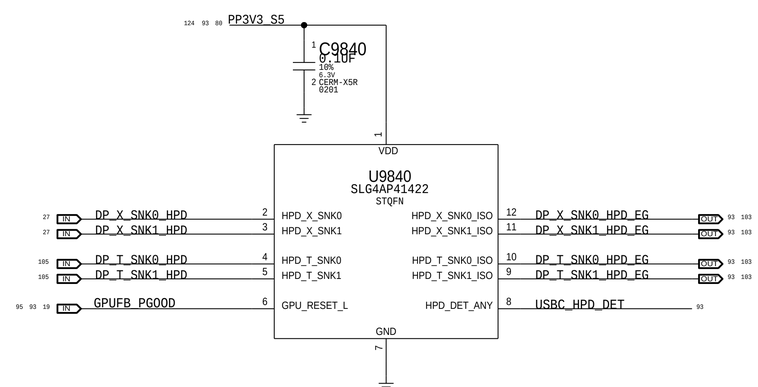

DP 2:1 ANALOG MUX

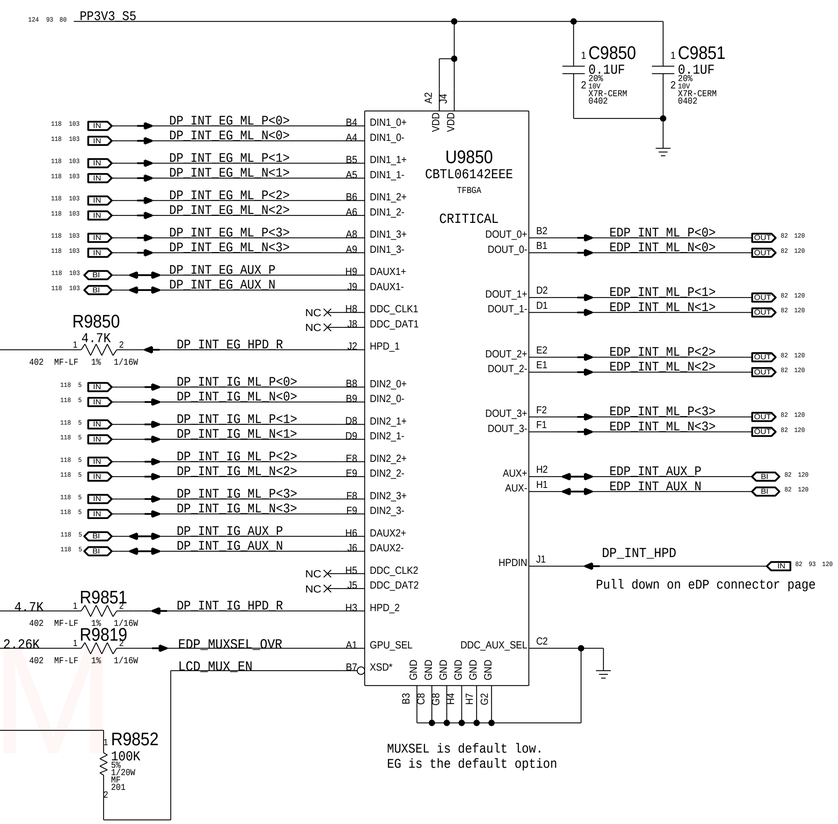

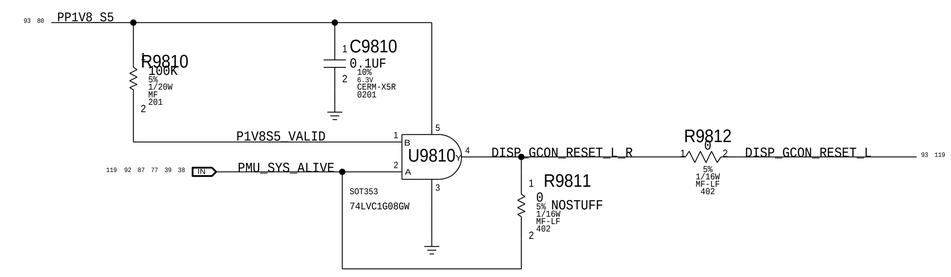

BOM_COST_GROUP=GRAPHICS

PAGE TITLE	EDP Mux
Apple Inc.	DRAWING NUMBER 051-02643 / SIZE D
	REVISION 4.0.0
	BRANCH evt-0
	PAGE 98 OF 200
	SHEET 93 OF 131

NOTICE OF PROPRIETARY PROPERTY:
THE INFORMATION CONTAINED HEREIN IS THE PROPRIETARY PROPERTY OF APPLE INC.
THE POSESSOR AGREES TO THE FOLLOWING:
I TO MAINTAIN THIS DOCUMENT IN CONFIDENCE
II NOT TO REPRODUCE OR COPY IT
III NOT TO REVEAL OR PUBLISH IT IN WHOLE OR PART
IV ALL RIGHTS RESERVED

PART NUMBER	QTY	DESCRIPTION	REFERENCE DES	CRITICAL	BOM OPTION
117S0008	1	RES,MTL FLIM,100K,1/16W,0201,SMD,LF	R9961		LOADRC:NO

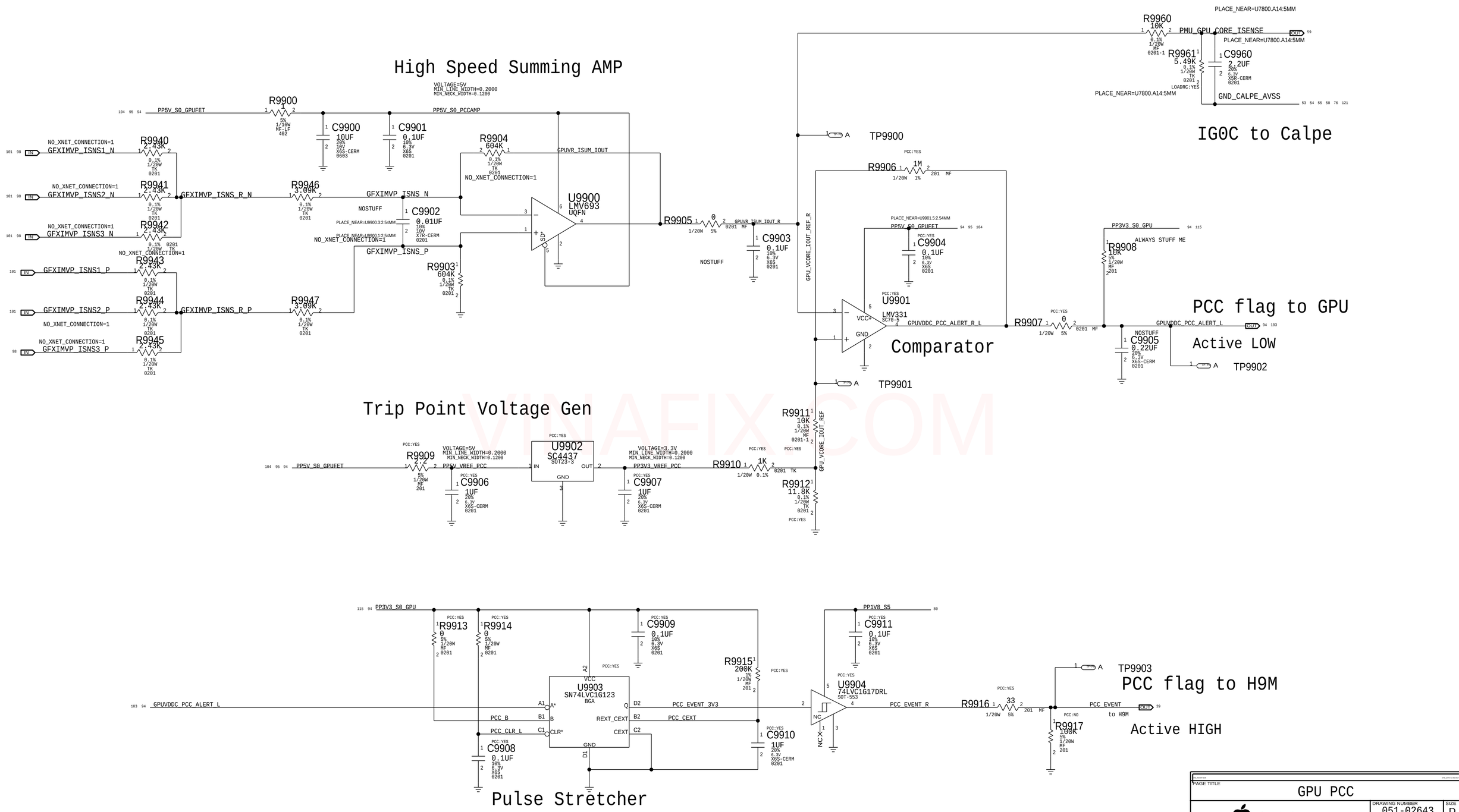

PAGE TITLE

GPU PCC

Apple Inc.

DRAWING NUMBER 051-02643 SIZE D

REVISION 4.0.0

BRANCH evt-0

PAGE 99 OF 200

SHEET 94 OF 131

NOTICE OF PROPRIETARY PROPERTY:
THE INFORMATION CONTAINED HEREIN IS THE PROPRIETARY PROPERTY OF APPLE INC.
THE POSESSOR AGREES TO THE FOLLOWING:
I TO MAINTAIN THIS DOCUMENT IN CONFIDENCE
II NOT TO REPRODUCE OR COPY IT
III NOT TO REVEAL OR PUBLISH IT IN WHOLE OR PART
IV ALL RIGHTS RESERVED

VINAFIX.COM

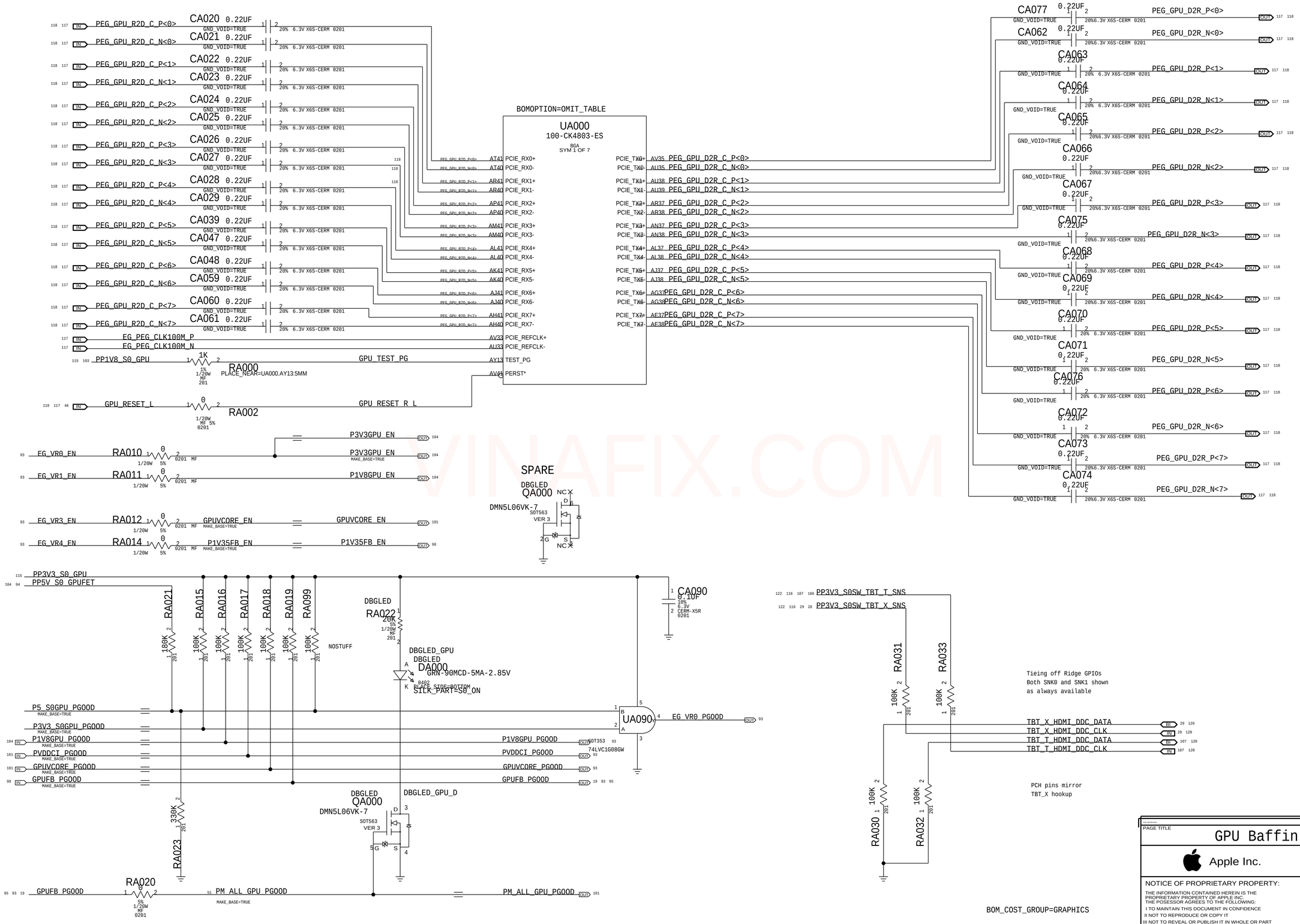

PAGE TITLE

GPU Baffin PCIe

Apple Inc.

DRAWING NUMBER	051-02643
SIZE	D
REVISION	4.0.0
BRANCH	evt-0
PAGE	100 OF 200
SHEET	95 OF 131

NOTICE OF PROPRIETARY PROPERTY:
THE INFORMATION CONTAINED HEREIN IS THE PROPRIETARY PROPERTY OF APPLE INC.
THE POSESSOR AGREES TO THE FOLLOWING:
I TO MAINTAIN THIS DOCUMENT IN CONFIDENCE
II NOT TO REPRODUCE OR COPY IT
III NOT TO REVEAL OR PUBLISH IT IN WHOLE OR PART
IV ALL RIGHTS RESERVED

VINAFIX.COM

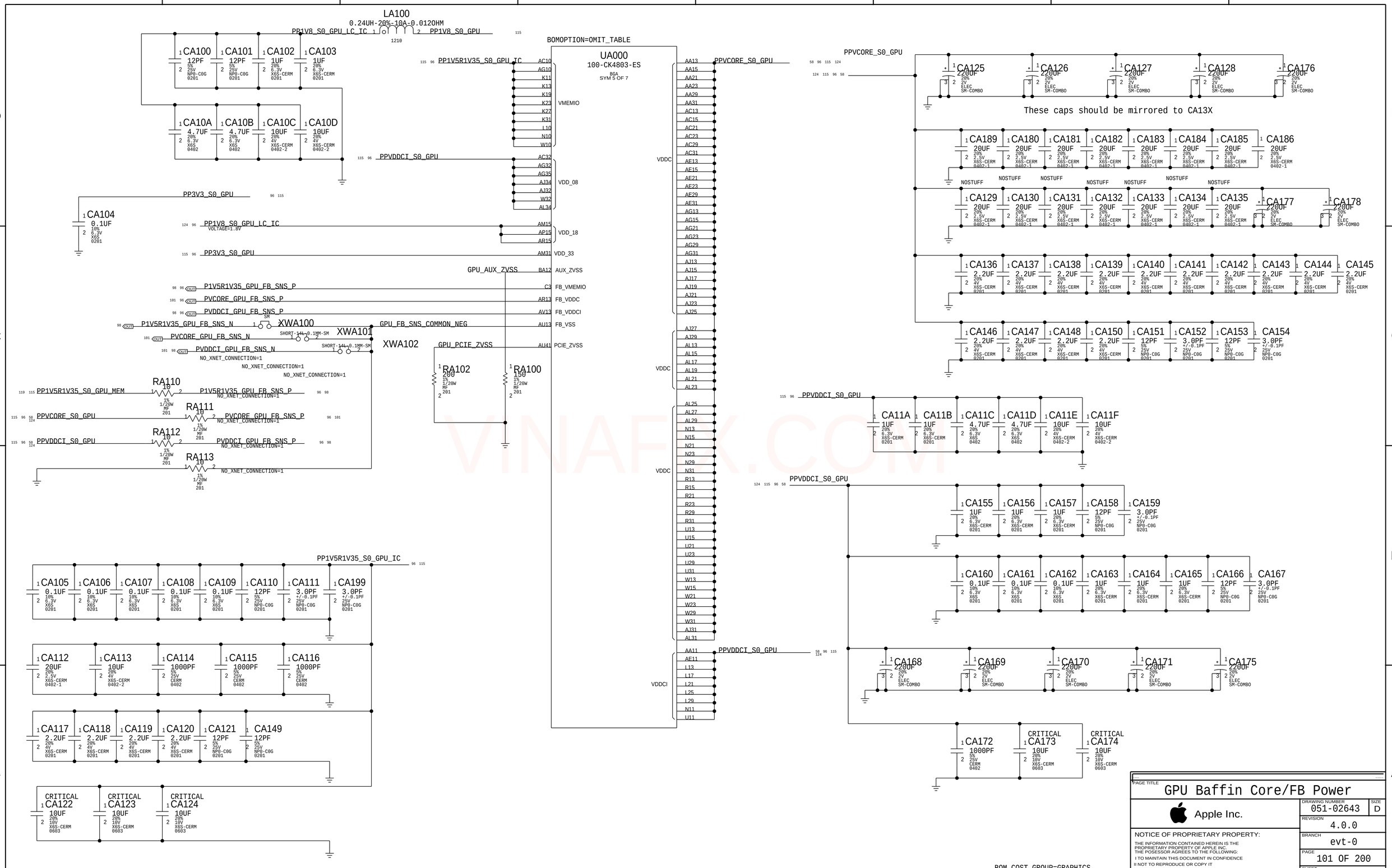

PAGE TITLE
GPU Baffin Core/FB Power

Apple Inc.

DRAWING NUMBER 051-02643 | SIZE D
REVISION 4.0.0
BRANCH evt-0
PAGE 101 OF 200
SHEET 96 OF 131

NOTICE OF PROPRIETARY PROPERTY:
THE INFORMATION CONTAINED HEREIN IS THE PROPRIETARY PROPERTY OF APPLE INC.
THE POSESSOR AGREES TO THE FOLLOWING:
I TO MAINTAIN THIS DOCUMENT IN CONFIDENCE
II NOT TO REPRODUCE OR COPY IT
III NOT TO REVEAL OR PUBLISH IT IN WHOLE OR PART
IV ALL RIGHTS RESERVED

VINAFIX.COM

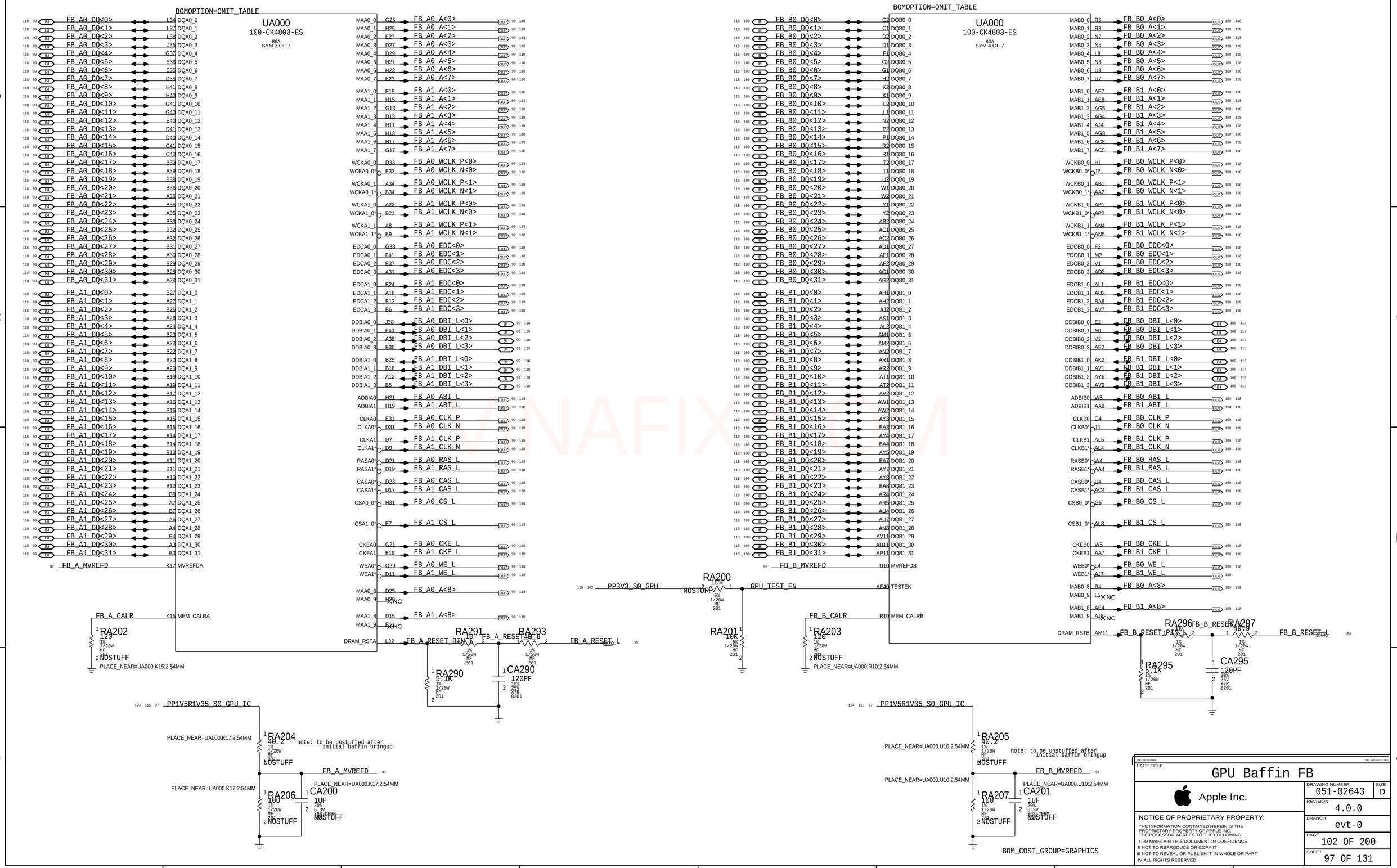

PAGE TITLE

GPU Baffin FB

Apple Inc.

DRAWING NUMBER 051-02643 SIZE D

REVISION 4.0.0

BRANCH evt-0

PAGE 102 OF 200

SHEET 97 OF 131

NOTICE OF PROPRIETARY PROPERTY:
THE INFORMATION CONTAINED HEREIN IS THE PROPRIETARY PROPERTY OF APPLE INC.
THE POSESSOR AGREES TO THE FOLLOWING:
I TO MAINTAIN THIS DOCUMENT IN CONFIDENCE
II NOT TO REPRODUCE OR COPY IT
III NOT TO REVEAL OR PUBLISH IT IN WHOLE OR PART
IV ALL RIGHTS RESERVED

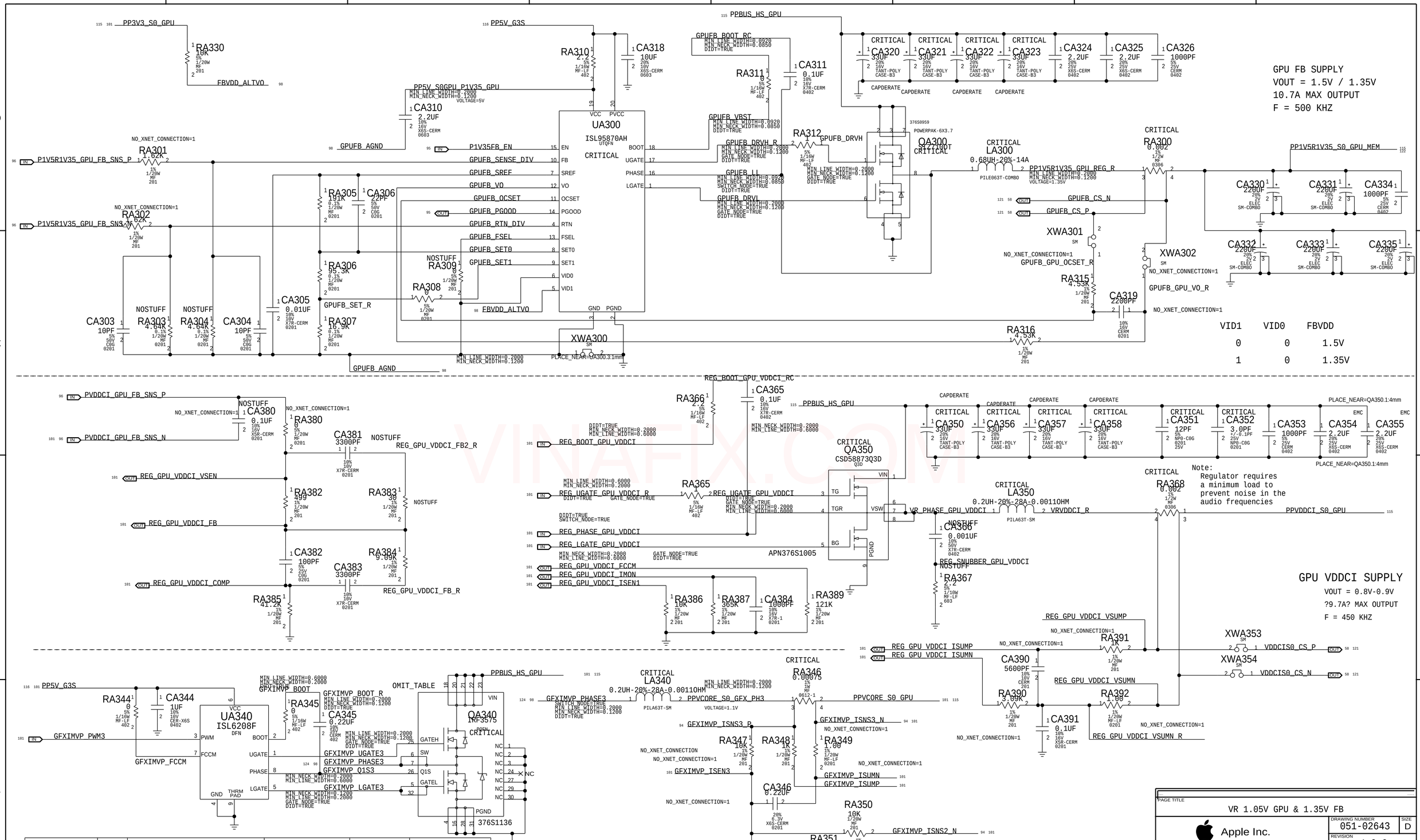

PART NUMBER	QTY	DESCRIPTION	REFERENCE DES	CRITICAL	BOM OPTION
376S00174	1	MOSFET,CTRL+SYNC,25V,4.1/1.4MO,QFN32,6x6	QA340	CRITICAL	

PAGE TITLE
VR 1.05V GPU & 1.35V FB

Apple Inc.

DRAWING NUMBER 051-02643 SIZE D
REVISION 4.0.0
BRANCH evt-0
PAGE 103 OF 200
SHEET 98 OF 131

NOTICE OF PROPRIETARY PROPERTY:
THE INFORMATION CONTAINED HEREIN IS THE PROPRIETARY PROPERTY OF APPLE INC.
THE POSESSOR AGREES TO THE FOLLOWING:
I TO MAINTAIN THIS DOCUMENT IN CONFIDENCE
II NOT TO REPRODUCE OR COPY IT
III NOT TO REVEAL OR PUBLISH IT IN WHOLE OR PART
IV ALL RIGHTS RESERVED

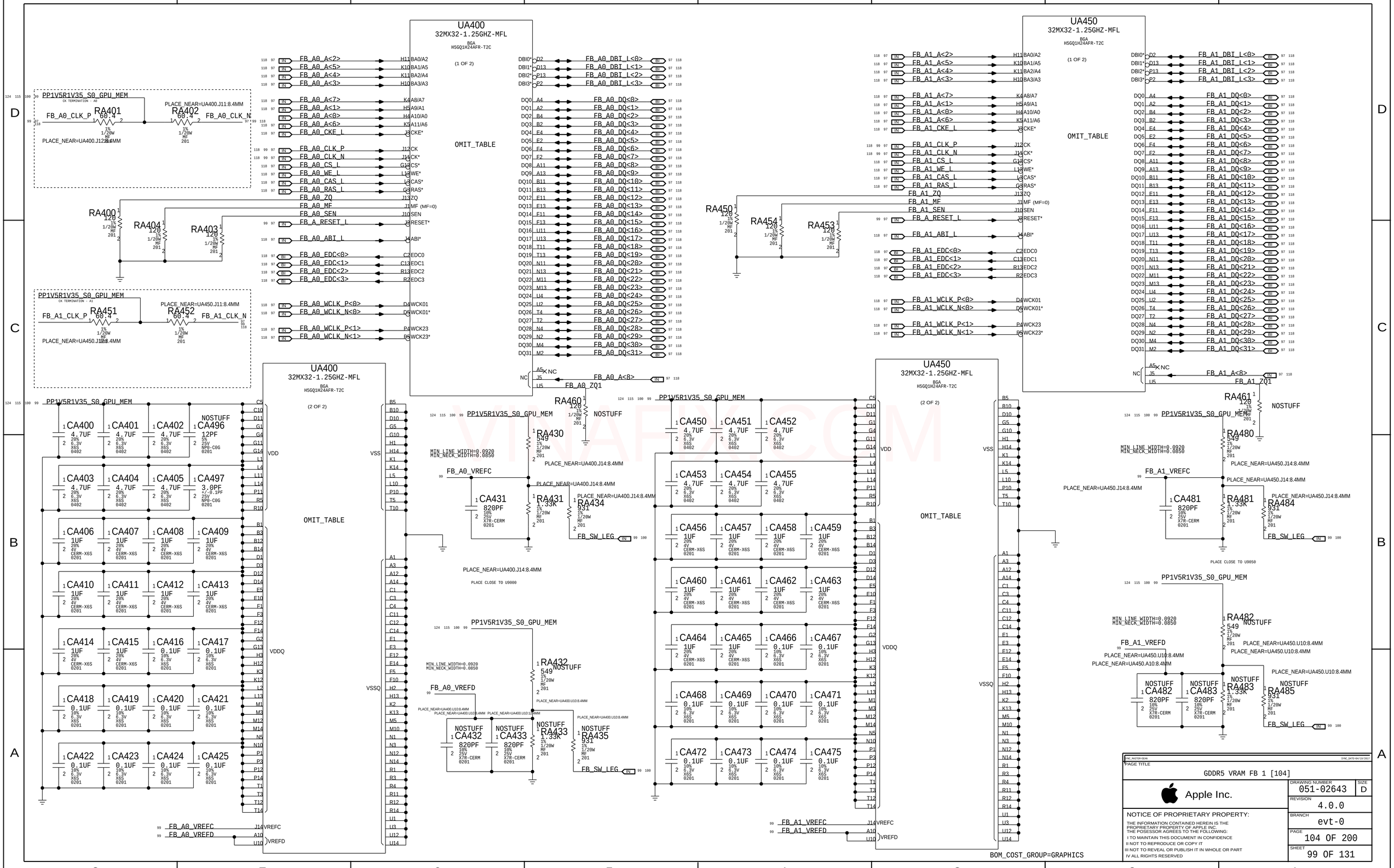

PAGE TITLE

GDDR5 VRAM FB 1 [104]

Apple Inc.

DRAWING NUMBER 051-02643 SIZE D

REVISION 4.0.0

BRANCH evt-0

PAGE 104 OF 200

SHEET 99 OF 131

NOTICE OF PROPRIETARY PROPERTY:

THE INFORMATION CONTAINED HEREIN IS THE PROPRIETARY PROPERTY OF APPLE INC. THE POSESSOR AGREES TO THE FOLLOWING:

I TO MAINTAIN THIS DOCUMENT IN CONFIDENCE

II NOT TO REPRODUCE OR COPY IT

III NOT TO REVEAL OR PUBLISH IT IN WHOLE OR PART

IV ALL RIGHTS RESERVED

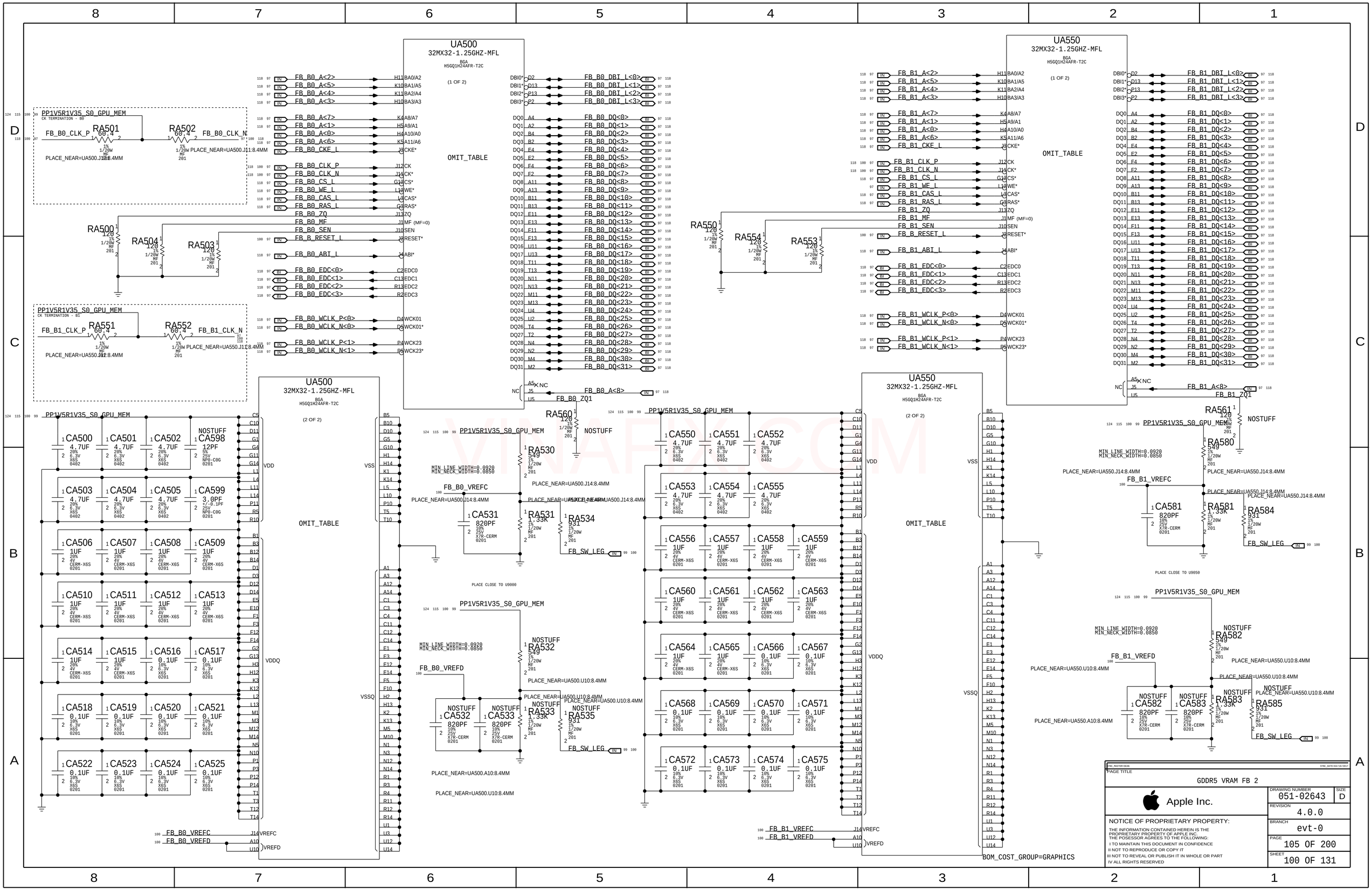
UA500
32MX32-1.25GHZ-MFL
BGA
H5GQ1H24AFR-T2C
(1 OF 2)
OMIT_TABLE
UA500
32MX32-1.25GHZ-MFL
BGA
H5GQ1H24AFR-T2C
(2 OF 2)
OMIT_TABLE
UA550
32MX32-1.25GHZ-MFL
BGA
H5GQ1H24AFR-T2C
(1 OF 2)
OMIT_TABLE
UA550
32MX32-1.25GHZ-MFL
BGA
H5GQ1H24AFR-T2C
(2 OF 2)
OMIT_TABLE
BOM_COST_GROUP=GRAPHICS
PP1V5R1V35_S0_GPU_MEM
CK TERMINATION - B0
CK TERMINATION - B1
PAGE TITLE
GDDR5 VRAM FB 2
Apple Inc.
NOTICE OF PROPRIETARY PROPERTY:
THE INFORMATION CONTAINED HEREIN IS THE PROPRIETARY PROPERTY OF APPLE INC.
THE POSESSOR AGREES TO THE FOLLOWING:
I TO MAINTAIN THIS DOCUMENT IN CONFIDENCE
II NOT TO REPRODUCE OR COPY IT
III NOT TO REVEAL OR PUBLISH IT IN WHOLE OR PART
IV ALL RIGHTS RESERVED
DRAWING NUMBER
051-02643
SIZE
D
REVISION
4.0.0
BRANCH
evt-0
PAGE
105 OF 200
SHEET
100 OF 131

PART NUMBER	QTY	DESCRIPTION	REFERENCE DES	CRITICAL	BOM OPTION
376S00174	2	MOSFET,CTRL+SYNC,25V,4.1/1.4MΩ,QFN32,6x6	QA640,QA650	CRITICAL	

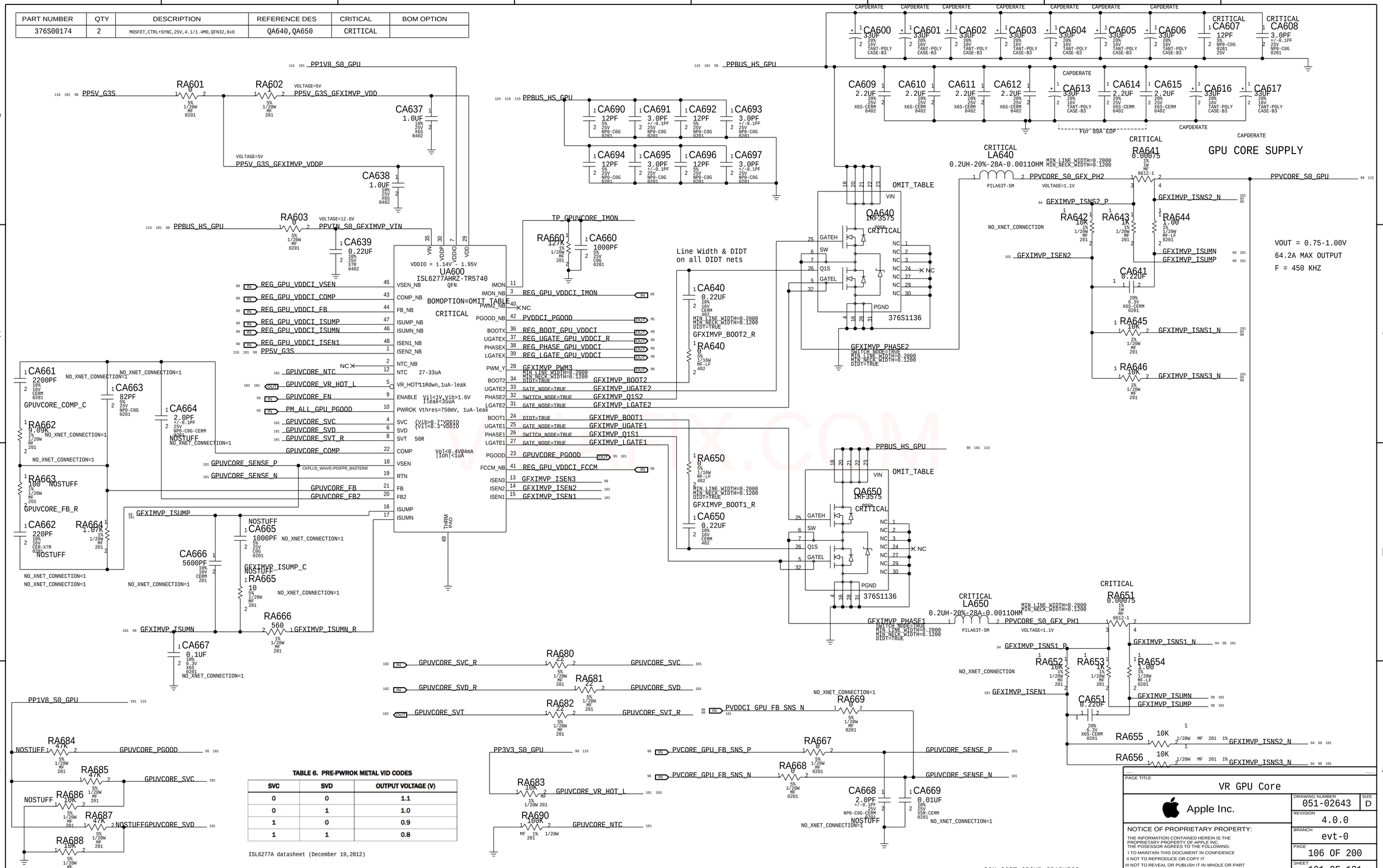

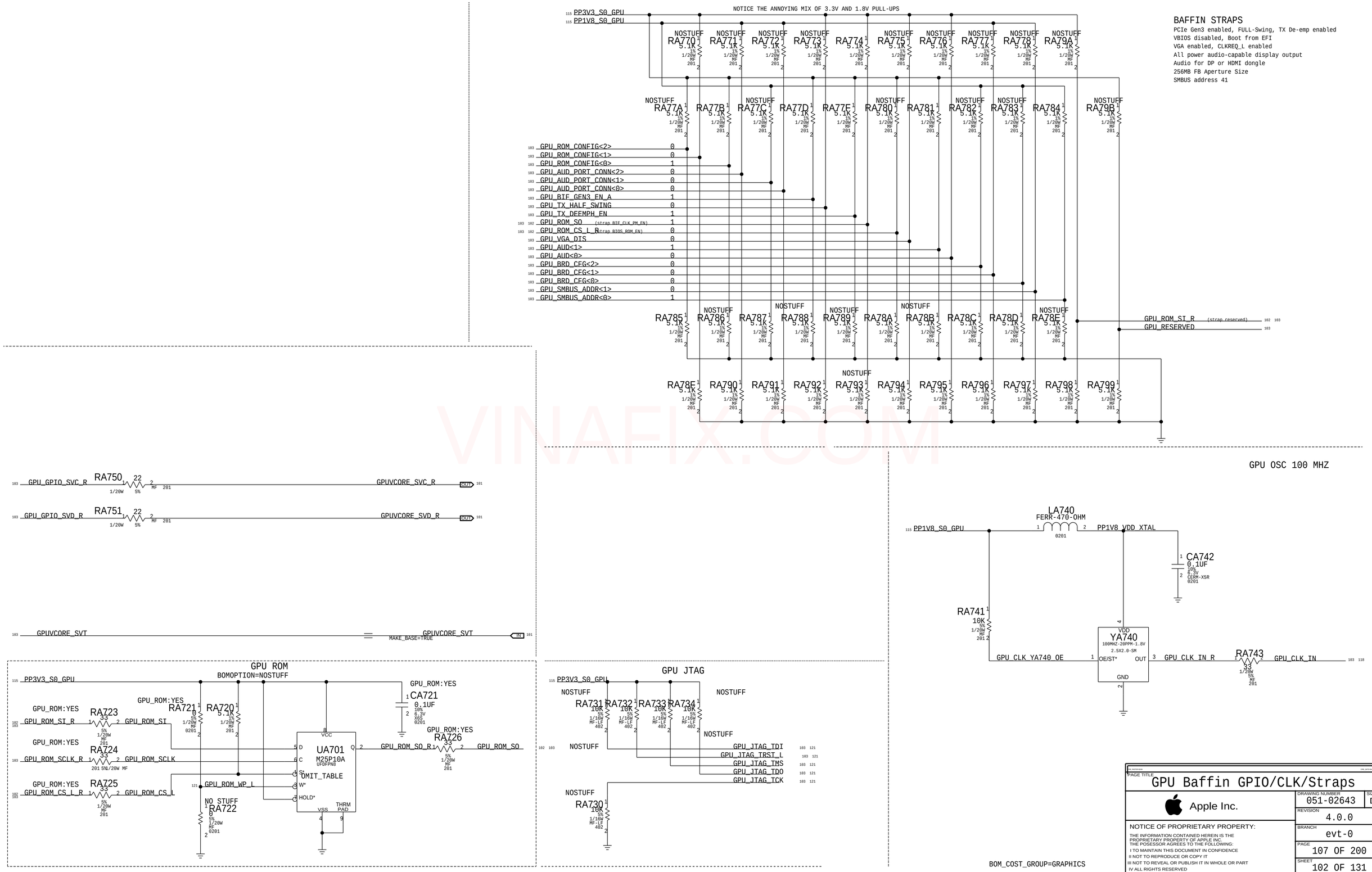

PAGE TITLE

GPU Baffin GPIO/CLK/Straps

Apple Inc.

DRAWING NUMBER	051-02643
SIZE	D
REVISION	4.0.0
BRANCH	evt-0
PAGE	107 OF 200
SHEET	102 OF 131

NOTICE OF PROPRIETARY PROPERTY:
THE INFORMATION CONTAINED HEREIN IS THE PROPRIETARY PROPERTY OF APPLE INC.
THE POSESSOR AGREES TO THE FOLLOWING:
I TO MAINTAIN THIS DOCUMENT IN CONFIDENCE
II NOT TO REPRODUCE OR COPY IT
III NOT TO REVEAL OR PUBLISH IT IN WHOLE OR PART
IV ALL RIGHTS RESERVED

VINAFIX.COM

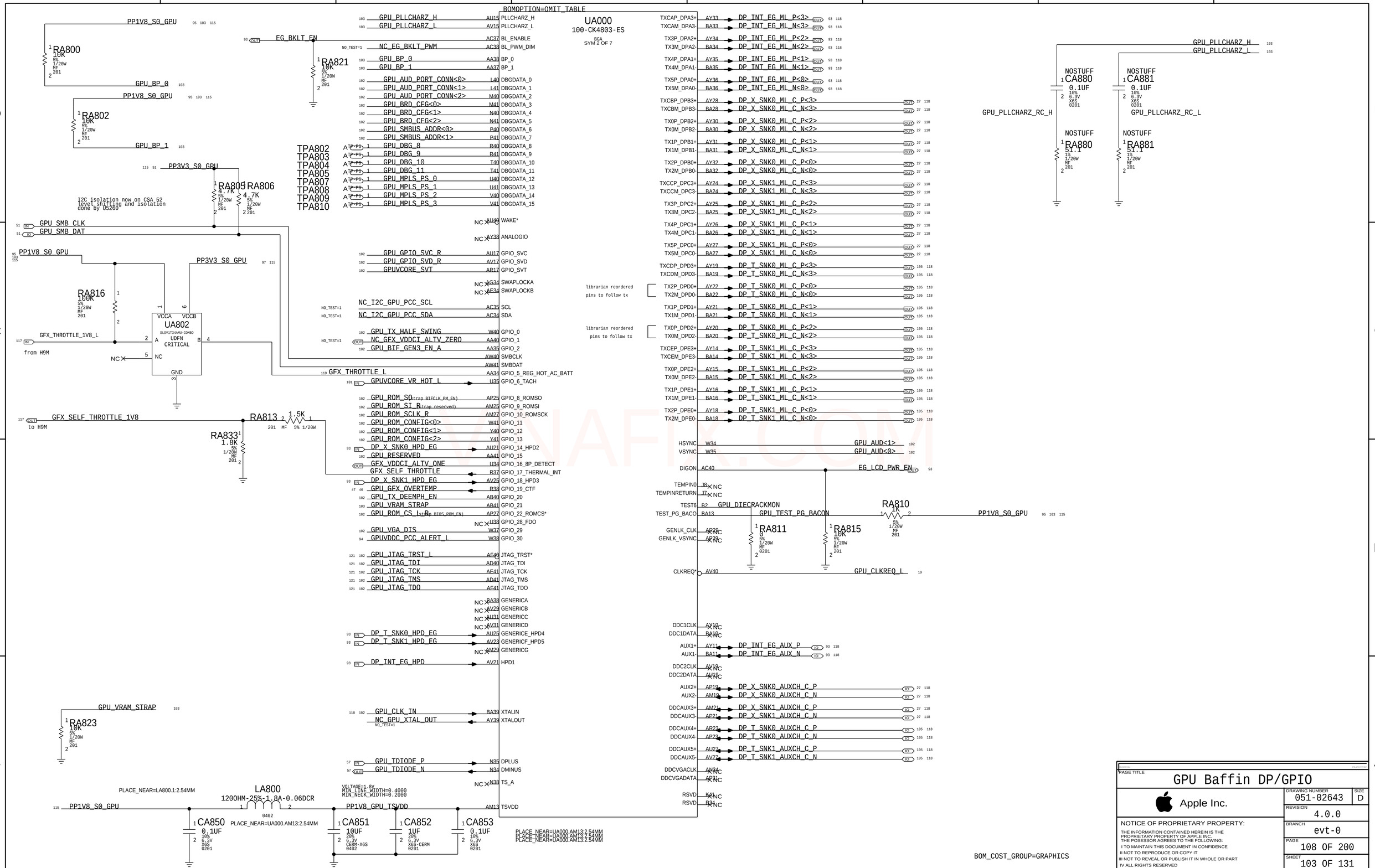
BOMOPTION=OMIT_TABLE
UA000
100-CK4803-ES
BGA
SYM 2 OF 7
RA800 10K
RA821 10K
RA802 10K
RA805 4.7K
RA806 4.7K
I2C isolation now on CSA 52 level shifting and isolation done by U5200
RA816 100K
UA802
SLSV1T344MU-COMBO
UDFN
CRITICAL
GFX_THROTTLE_1V8_L
from H9M
GFX_SELF_THROTTLE_1V8
to H9M
RA813 1.5K
RA833 1.8K
RA823 10K
LA800
1200HM-25%-1.8A-0.06DCR
CA850 0.1UF
CA851 10UF
CA852 1UF
CA853 0.1UF
PP1V8_S0_GPU
PP3V3_S0_GPU
PP1V8_GPU_TSVDD
GPU_VRAM_STRAP
GPU_PLLCHARZ_RC_H
GPU_PLLCHARZ_RC_L
CA880 0.1UF
CA881 0.1UF
RA880 51.1
RA881 51.1
RA810 1K
RA811 0
RA815 10K
GPU_TEST_PG_BACON
GPU_DIECRACKMON
GPU_CLKREQ_L
EG_LCD_PWR_EN
GPU_AUD<1>
GPU_AUD<0>
DP_INT_EG_AUX_P
DP_INT_EG_AUX_N
DP_X_SNK0_AUXCH_C_P
DP_X_SNK0_AUXCH_C_N
DP_T_SNK0_AUXCH_C_P
DP_T_SNK0_AUXCH_C_N
DP_T_SNK1_AUXCH_C_P
DP_T_SNK1_AUXCH_C_N
librarian reordered pins to follow tx
BOM_COST_GROUP=GRAPHICS
PAGE TITLE
GPU Baffin DP/GPIO
Apple Inc.
DRAWING NUMBER 051-02643
SIZE D
REVISION 4.0.0
BRANCH evt-0
PAGE 108 OF 200
SHEET 103 OF 131
NOTICE OF PROPRIETARY PROPERTY:
THE INFORMATION CONTAINED HEREIN IS THE PROPRIETARY PROPERTY OF APPLE INC.
THE POSESSOR AGREES TO THE FOLLOWING:
I TO MAINTAIN THIS DOCUMENT IN CONFIDENCE
II NOT TO REPRODUCE OR COPY IT
III NOT TO REVEAL OR PUBLISH IT IN WHOLE OR PART
IV ALL RIGHTS RESERVED

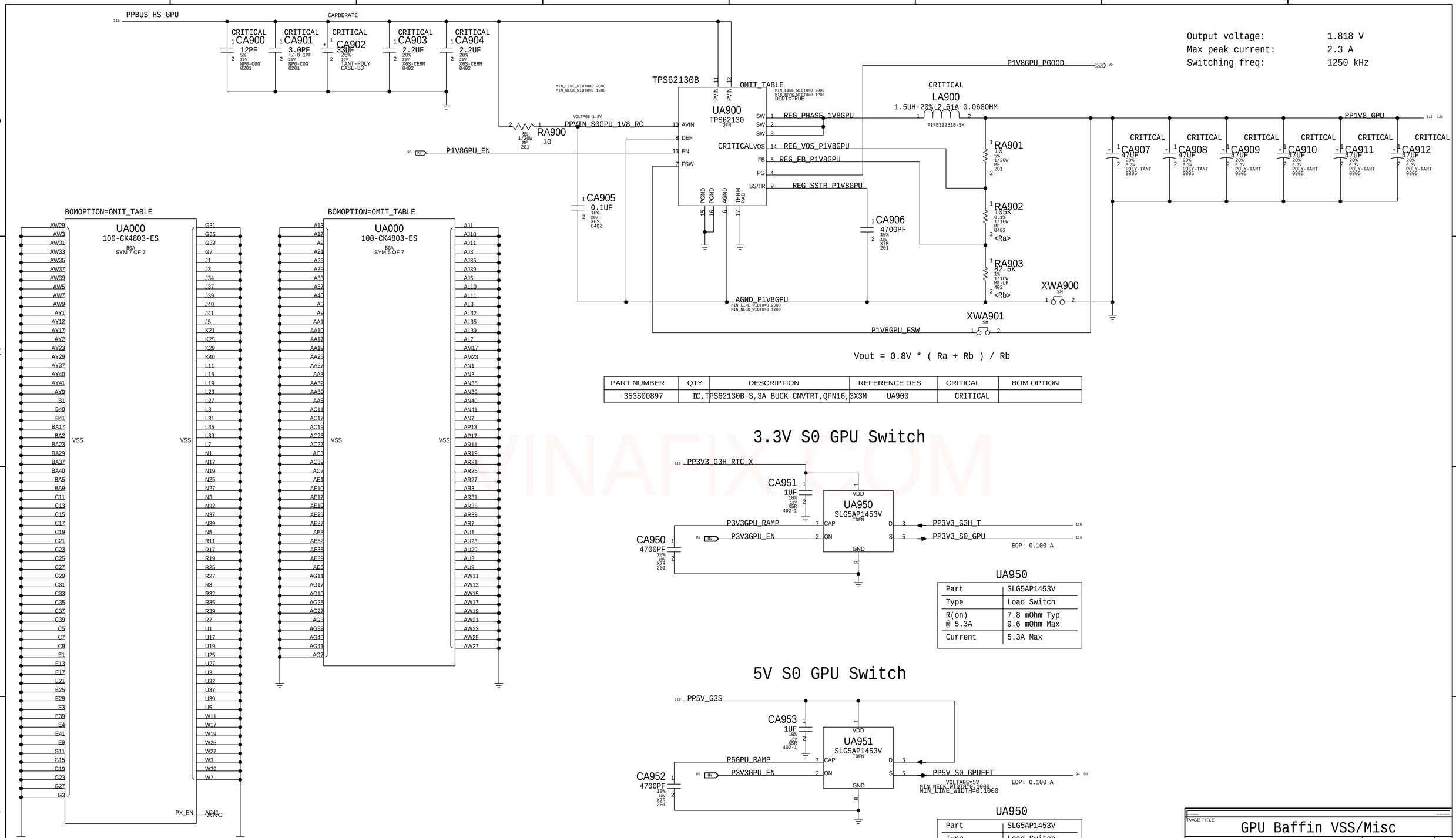

PART NUMBER	QTY	DESCRIPTION	REFERENCE DES	CRITICAL	BOM OPTION
353S00897	1	IC,TPS62130B-S,3A BUCK CNVTRT,QFN16,3X3M	UA900	CRITICAL	

UA950	
Part	SLG5AP1453V
Type	Load Switch
R(on) @ 5.3A	7.8 mOhm Typ 9.6 mOhm Max
Current	5.3A Max

UA950	
Part	SLG5AP1453V
Type	Load Switch
R(on) @ 5.3A	7.8 mOhm Typ 9.6 mOhm Max
Current	5.3A Max

PAGE TITLE
GPU Baffin VSS/Misc

Apple Inc.

DRAWING NUMBER 051-02643 SIZE D
REVISION 4.0.0
BRANCH evt-0
PAGE 109 OF 200
SHEET 104 OF 131

NOTICE OF PROPRIETARY PROPERTY:
THE INFORMATION CONTAINED HEREIN IS THE PROPRIETARY PROPERTY OF APPLE INC.
THE POSESSOR AGREES TO THE FOLLOWING:
I TO MAINTAIN THIS DOCUMENT IN CONFIDENCE
II NOT TO REPRODUCE OR COPY IT
III NOT TO REVEAL OR PUBLISH IT IN WHOLE OR PART
IV ALL RIGHTS RESERVED

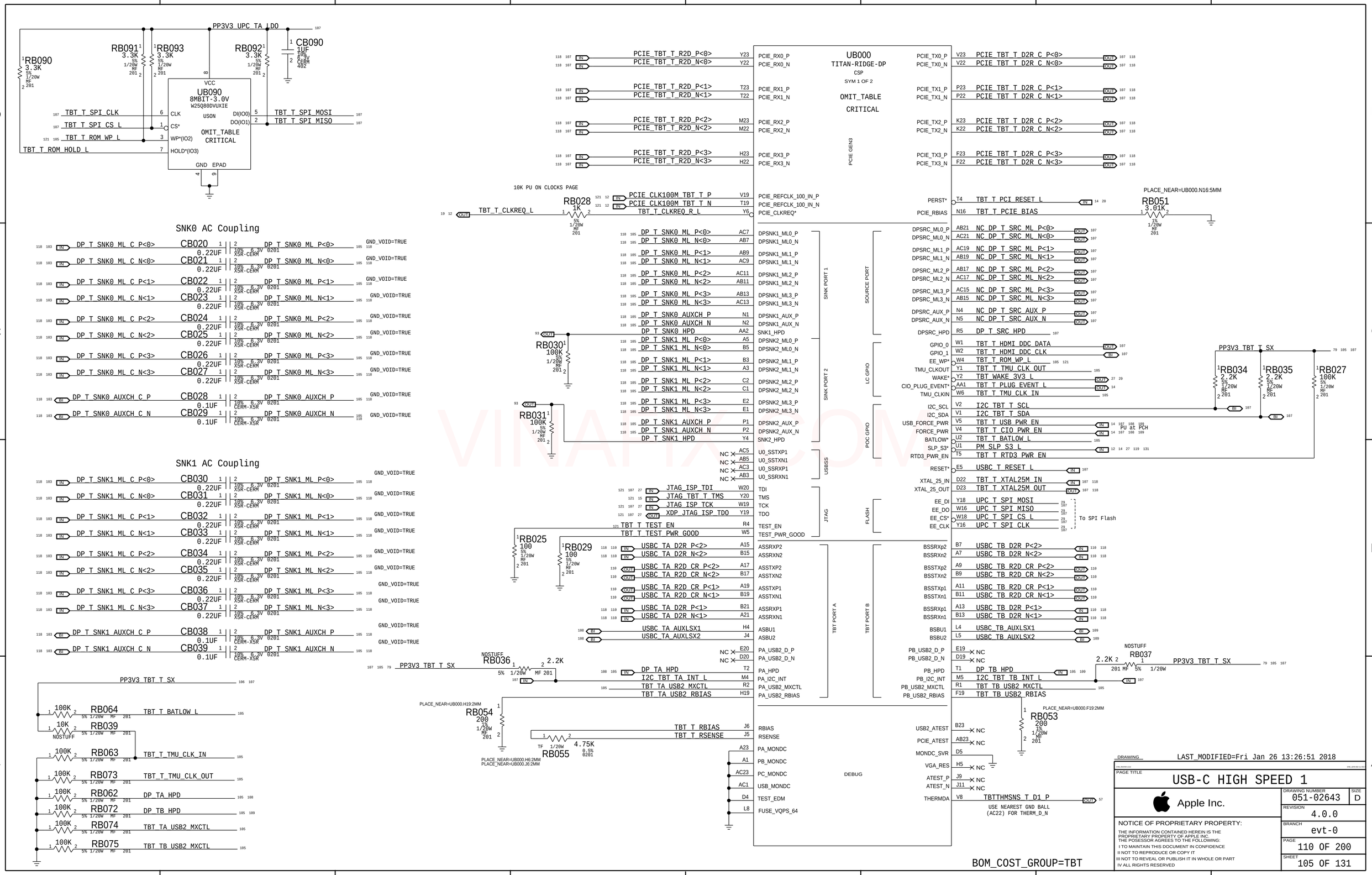
PP3V3_UPC_TA_LDO
RB090 3.3K
RB091 3.3K
RB093 3.3K
RB092 3.3K
CB090 1UF
UB090 8MBIT-3.0V W25Q80DVUXIE USON
OMIT_TABLE CRITICAL
TBT_T_SPI_CLK
TBT_T_SPI_CS_L
TBT_T_ROM_WP_L
TBT_T_ROM_HOLD_L
TBT_T_SPI_MOSI
TBT_T_SPI_MISO
UB000 TITAN-RIDGE-DP CSP SYM 1 OF 2
OMIT_TABLE CRITICAL
PCIE GEN3
10K PU ON CLOCKS PAGE
TBT_T_CLKREQ_L
RB028 1K
PLACE_NEAR=UB000.N16:5MM
RB051 3.01K
SNK0 AC Coupling
SNK1 AC Coupling
SINK PORT 1
SINK PORT 2
SOURCE PORT
LC GIO
POC GIO
USBSS
JTAG
FLASH
TBT PORT A
TBT PORT B
DEBUG
RB030 100K
RB031 100K
RB025 100
RB029 100
To SPI Flash
PU at PCH
PP3V3_TBT_T_SX
RB027 100K
RB034 2.2K
RB035 2.2K
NOSTUFF
RB036 2.2K
RB037 2.2K
RB054 200
RB055 4.75K
RB053 200
RB064 100K
RB039 10K
RB063 100K
RB073 100K
RB062 100K
RB072 100K
RB074 100K
RB075 100K
USE NEAREST GND BALL (AC22) FOR THERM_D_N
BOM_COST_GROUP=TBT
DRAWING LAST_MODIFIED=Fri Jan 26 13:26:51 2018
PAGE TITLE USB-C HIGH SPEED 1
Apple Inc.
DRAWING NUMBER 051-02643
SIZE D
REVISION 4.0.0
BRANCH evt-0
PAGE 110 OF 200
SHEET 105 OF 131
NOTICE OF PROPRIETARY PROPERTY:
THE INFORMATION CONTAINED HEREIN IS THE PROPRIETARY PROPERTY OF APPLE INC.
THE POSESSOR AGREES TO THE FOLLOWING:
I TO MAINTAIN THIS DOCUMENT IN CONFIDENCE
II NOT TO REPRODUCE OR COPY IT
III NOT TO REVEAL OR PUBLISH IT IN WHOLE OR PART
IV ALL RIGHTS RESERVED

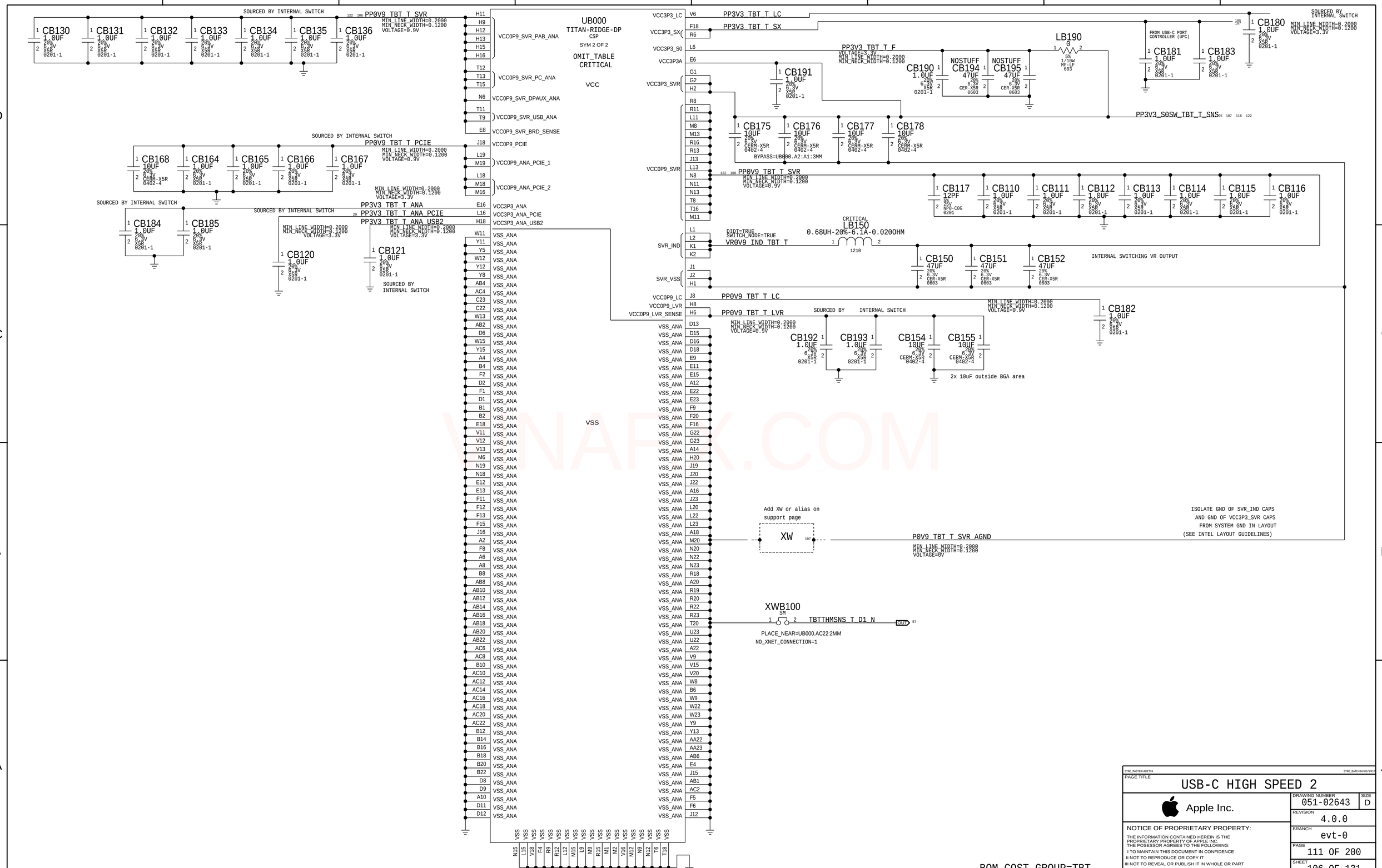
UB000
TITAN-RIDGE-DP
CSP
SYM 2 OF 2
OMIT_TABLE
CRITICAL
VCC
VSS
PP0V9_TBT_T_SVR
PP0V9_TBT_T_PCIE
PP3V3_TBT_T_ANA
PP3V3_TBT_T_ANA_PCIE
PP3V3_TBT_T_ANA_USB2
PP3V3_TBT_T_LC
PP3V3_TBT_T_SX
PP3V3_TBT_T_F
PP3V3_S0SW_TBT_T_SNS
PP0V9_TBT_T_LC
PP0V9_TBT_T_LVR
VR0V9_IND_TBT_T
LB150
0.68UH-20%-6.1A-0.020OHM
LB190
INTERNAL SWITCHING VR OUTPUT
P0V9_TBT_T_SVR_AGND
ISOLATE GND OF SVR_IND CAPS
AND GND OF VCC3P3_SVR CAPS
FROM SYSTEM GND IN LAYOUT
(SEE INTEL LAYOUT GUIDELINES)
Add XW or alias on
support page
XW
XWB100
TBTTHMSNS_T_D1_N
PLACE_NEAR=UB000.AC22:2MM
NO_XNET_CONNECTION=1
2x 10uF outside BGA area
BOM_COST_GROUP=TBT
PAGE TITLE
USB-C HIGH SPEED 2
Apple Inc.
DRAWING NUMBER
051-02643
SIZE
D
REVISION
4.0.0
BRANCH
evt-0
PAGE
111 OF 200
SHEET
106 OF 131
NOTICE OF PROPRIETARY PROPERTY:
THE INFORMATION CONTAINED HEREIN IS THE PROPRIETARY PROPERTY OF APPLE INC.
THE POSESSOR AGREES TO THE FOLLOWING:
I TO MAINTAIN THIS DOCUMENT IN CONFIDENCE
II NOT TO REPRODUCE OR COPY IT
III NOT TO REVEAL OR PUBLISH IT IN WHOLE OR PART
IV ALL RIGHTS RESERVED

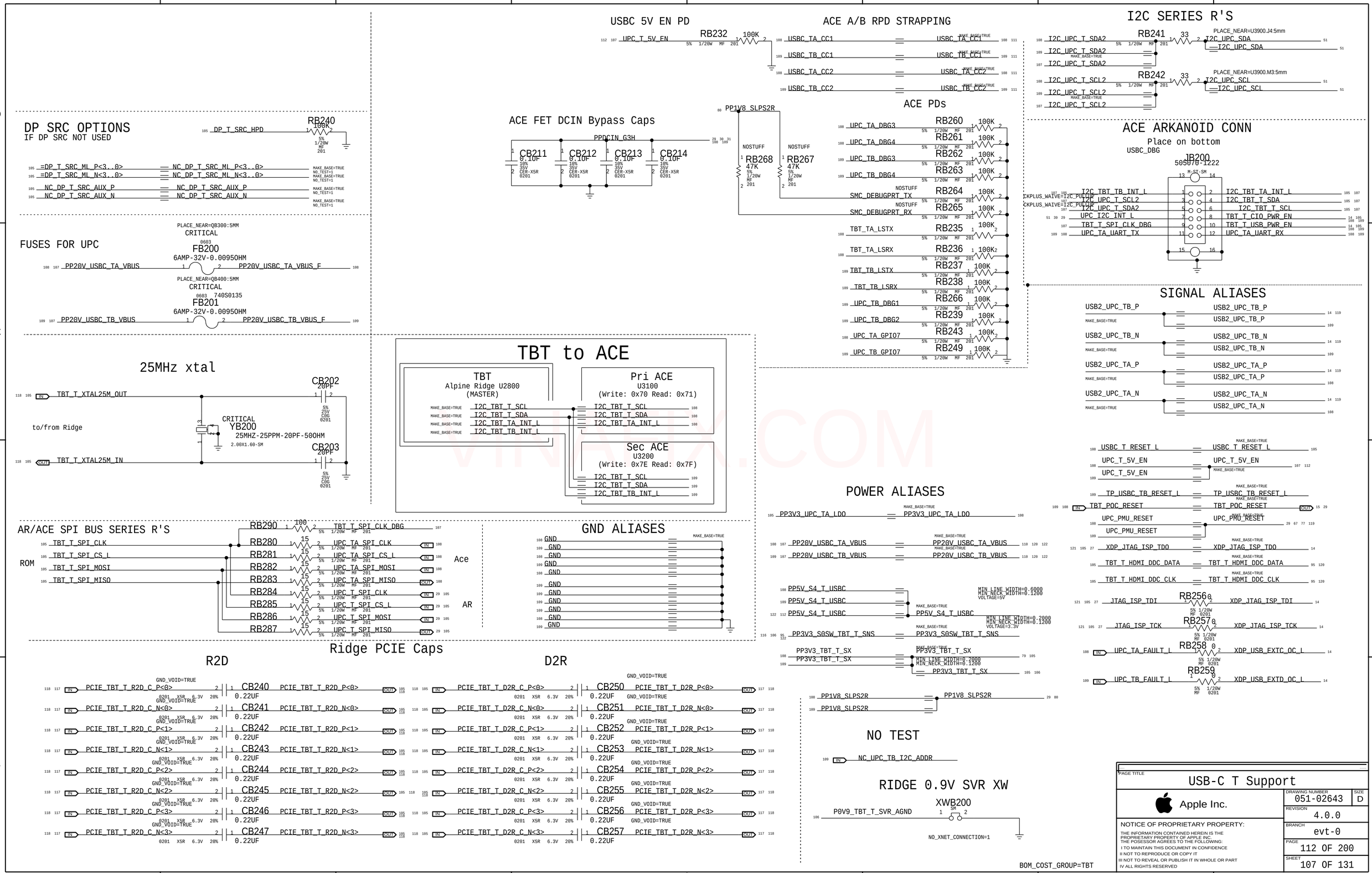
DP SRC OPTIONS
IF DP SRC NOT USED
DP_T_SRC_HPD
RB240
100K
=DP_T_SRC_ML_P<3..0>
=DP_T_SRC_ML_N<3..0>
NC_DP_T_SRC_ML_P<3..0>
NC_DP_T_SRC_ML_N<3..0>
NC_DP_T_SRC_AUX_P
NC_DP_T_SRC_AUX_N
FUSES FOR UPC
PLACE_NEAR=QB300:5MM
CRITICAL
FB200
6AMP-32V-0.00950HM
PP20V_USBC_TA_VBUS
PP20V_USBC_TA_VBUS_F
PLACE_NEAR=QB400:5MM
CRITICAL
FB201
740S0135
6AMP-32V-0.00950HM
PP20V_USBC_TB_VBUS
PP20V_USBC_TB_VBUS_F
25MHz xtal
TBT_T_XTAL25M_OUT
TBT_T_XTAL25M_IN
to/from Ridge
CB202
20PF
CB203
20PF
CRITICAL
YB200
25MHZ-25PPM-20PF-50OHM
2.00X1.60-SM
USBC 5V EN PD
UPC_T_5V_EN
RB232
100K
ACE FET DCIN Bypass Caps
PPDCIN_G3H
CB211
CB212
CB213
CB214
0.10F
ACE A/B RPD STRAPPING
USBC_TA_CC1
USBC_TB_CC1
USBC_TA_CC2
USBC_TB_CC2
ACE PDs
PP1V8_SLPS2R
NOSTUFF
RB268
47K
RB267
47K
SMC_DEBUGPRT_TX
SMC_DEBUGPRT_RX
UPC_TA_DBG3
UPC_TA_DBG4
UPC_TB_DBG3
UPC_TB_DBG4
TBT_TA_LSTX
TBT_TA_LSRX
TBT_TB_LSTX
TBT_TB_LSRX
UPC_TB_DBG1
UPC_TB_DBG2
UPC_TA_GPIO7
UPC_TB_GPIO7
RB260
RB261
RB262
RB263
RB264
RB265
RB235
RB236
RB237
RB238
RB266
RB239
RB243
RB249
100K
I2C SERIES R'S
RB241
RB242
33
PLACE_NEAR=U3900.J4:5mm
PLACE_NEAR=U3900.M3:5mm
I2C_UPC_T_SDA2
I2C_UPC_T_SCL2
I2C_UPC_SDA
I2C_UPC_SCL
ACE ARKANOID CONN
Place on bottom
USBC_DBG
JB200
505070-1222
M-ST-SM
I2C_TBT_TB_INT_L
I2C_UPC_T_SCL2
I2C_UPC_T_SDA2
UPC_I2C_INT_L
TBT_T_SPI_CLK_DBG
UPC_TA_UART_TX
I2C_TBT_TA_INT_L
I2C_TBT_T_SDA
I2C_TBT_T_SCL
TBT_T_CIO_PWR_EN
TBT_T_USB_PWR_EN
UPC_TA_UART_RX
CKPLUS_WAIVE=I2C_PULLUP
SIGNAL ALIASES
USB2_UPC_TB_P
USB2_UPC_TB_N
USB2_UPC_TA_P
USB2_UPC_TA_N
MAKE_BASE=TRUE
USBC_T_RESET_L
UPC_T_5V_EN
TP_USBC_TB_RESET_L
TBT_POC_RESET
UPC_PMU_RESET
XDP_JTAG_ISP_TDO
TBT_T_HDMI_DDC_DATA
TBT_T_HDMI_DDC_CLK
JTAG_ISP_TDI
JTAG_ISP_TCK
UPC_TA_FAULT_L
UPC_TB_FAULT_L
RB256
RB257
RB258
RB259
XDP_JTAG_ISP_TDI
XDP_JTAG_ISP_TCK
XDP_USB_EXTC_OC_L
XDP_USB_EXTD_OC_L
TBT to ACE
TBT
Alpine Ridge U2800
(MASTER)
Pri ACE
U3100
(Write: 0x70 Read: 0x71)
Sec ACE
U3200
(Write: 0x7E Read: 0x7F)
I2C_TBT_T_SCL
I2C_TBT_T_SDA
I2C_TBT_TA_INT_L
I2C_TBT_TB_INT_L
AR/ACE SPI BUS SERIES R'S
ROM
TBT_T_SPI_CLK
TBT_T_SPI_CS_L
TBT_T_SPI_MOSI
TBT_T_SPI_MISO
RB290
RB280
RB281
RB282
RB283
RB284
RB285
RB286
RB287
100
15
TBT_T_SPI_CLK_DBG
UPC_TA_SPI_CLK
UPC_TA_SPI_CS_L
UPC_TA_SPI_MOSI
UPC_TA_SPI_MISO
UPC_T_SPI_CLK
UPC_T_SPI_CS_L
UPC_T_SPI_MOSI
UPC_T_SPI_MISO
Ace
AR
GND ALIASES
GND
POWER ALIASES
PP3V3_UPC_TA_LDO
PP20V_USBC_TA_VBUS
PP20V_USBC_TB_VBUS
PP5V_S4_T_USBC
PP3V3_S0SW_TBT_T_SNS
PP3V3_TBT_T_SX
PP1V8_SLPS2R
MIN_LINE_WIDTH=0.6000
MIN_NECK_WIDTH=0.1200
VOLTAGE=5V
MIN_LINE_WIDTH=0.2000
MIN_NECK_WIDTH=0.1200
VOLTAGE=3.3V
MIN_LINE_WIDTH=0.2000
MIN_NECK_WIDTH=0.1200
NO TEST
NC_UPC_TB_I2C_ADDR
RIDGE 0.9V SVR XW
XWB200
P0V9_TBT_T_SVR_AGND
NO_XNET_CONNECTION=1
Ridge PCIE Caps
R2D
D2R
GND_VOID=TRUE
PCIE_TBT_T_R2D_C_P<0>
PCIE_TBT_T_R2D_C_N<0>
PCIE_TBT_T_R2D_C_P<1>
PCIE_TBT_T_R2D_C_N<1>
PCIE_TBT_T_R2D_C_P<2>
PCIE_TBT_T_R2D_C_N<2>
PCIE_TBT_T_R2D_C_P<3>
PCIE_TBT_T_R2D_C_N<3>
PCIE_TBT_T_R2D_P<0>
PCIE_TBT_T_R2D_N<0>
PCIE_TBT_T_R2D_P<1>
PCIE_TBT_T_R2D_N<1>
PCIE_TBT_T_R2D_P<2>
PCIE_TBT_T_R2D_N<2>
PCIE_TBT_T_R2D_P<3>
PCIE_TBT_T_R2D_N<3>
CB240
CB241
CB242
CB243
CB244
CB245
CB246
CB247
CB250
CB251
CB252
CB253
CB254
CB255
CB256
CB257
0.22UF
0201 X5R 6.3V 20%
PAGE TITLE
USB-C T Support
Apple Inc.
DRAWING NUMBER
051-02643
SIZE
D
REVISION
4.0.0
BRANCH
evt-0
PAGE
112 OF 200
SHEET
107 OF 131
NOTICE OF PROPRIETARY PROPERTY:
THE INFORMATION CONTAINED HEREIN IS THE PROPRIETARY PROPERTY OF APPLE INC.
THE POSESSOR AGREES TO THE FOLLOWING:
I TO MAINTAIN THIS DOCUMENT IN CONFIDENCE
II NOT TO REPRODUCE OR COPY IT
III NOT TO REVEAL OR PUBLISH IT IN WHOLE OR PART
IV ALL RIGHTS RESERVED
BOM_COST_GROUP=TBT

PRIMARY ACE USB-C PORT CONTROLLER (UPC)

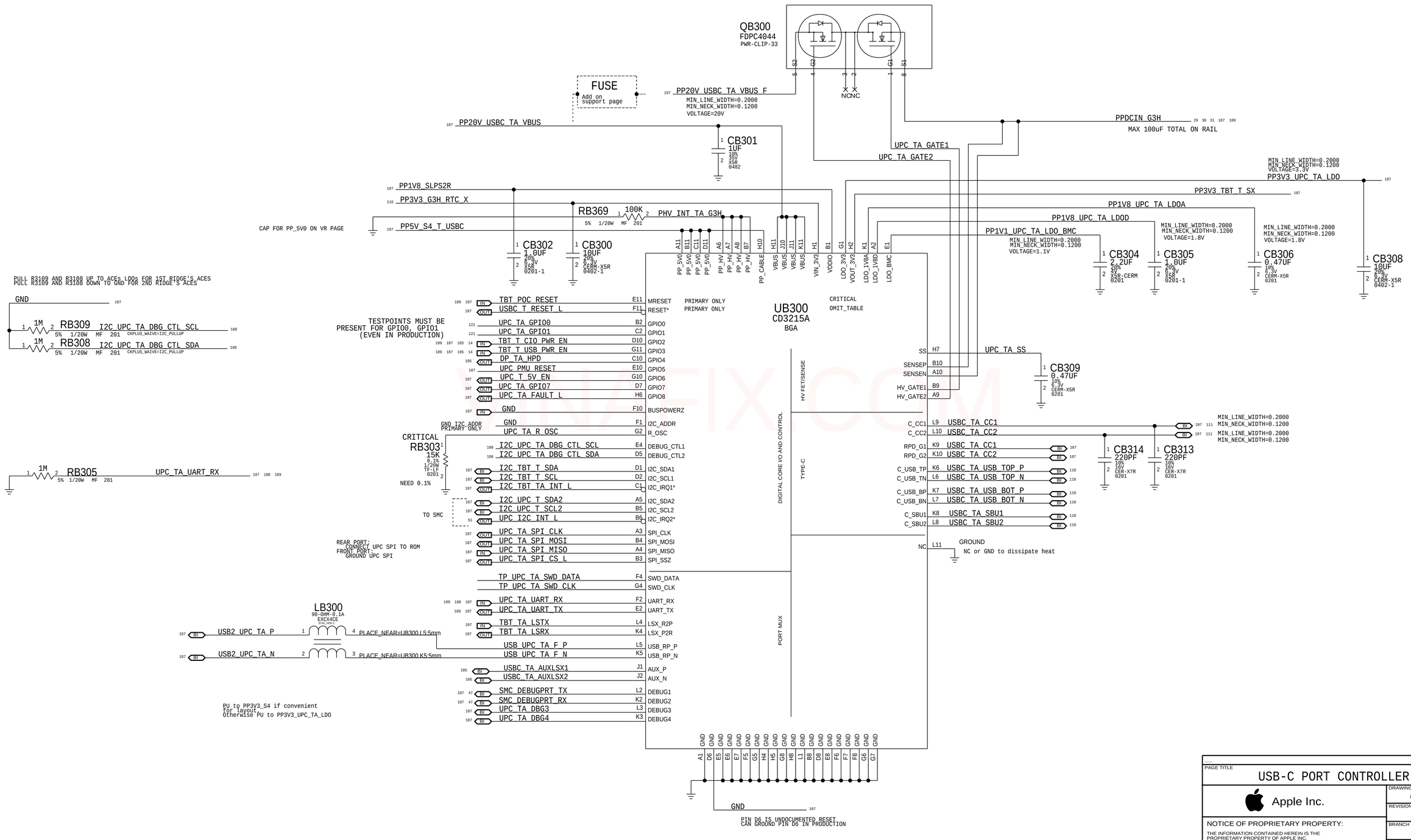

BOM_COST_GROUP=USB-C

PAGE TITLE: USB-C PORT CONTROLLER A

Apple Inc.

DRAWING NUMBER	051-02643
SIZE	D
REVISION	4.0.0
BRANCH	evt-0
PAGE	113 OF 200
SHEET	108 OF 131

NOTICE OF PROPRIETARY PROPERTY:
THE INFORMATION CONTAINED HEREIN IS THE PROPRIETARY PROPERTY OF APPLE INC.
THE POSESSOR AGREES TO THE FOLLOWING:
I TO MAINTAIN THIS DOCUMENT IN CONFIDENCE
II NOT TO REPRODUCE OR COPY IT
III NOT TO REVEAL OR PUBLISH IT IN WHOLE OR PART
IV ALL RIGHTS RESERVED

SECONDARY ACE USB-C PORT CONTROLLER (UPC)

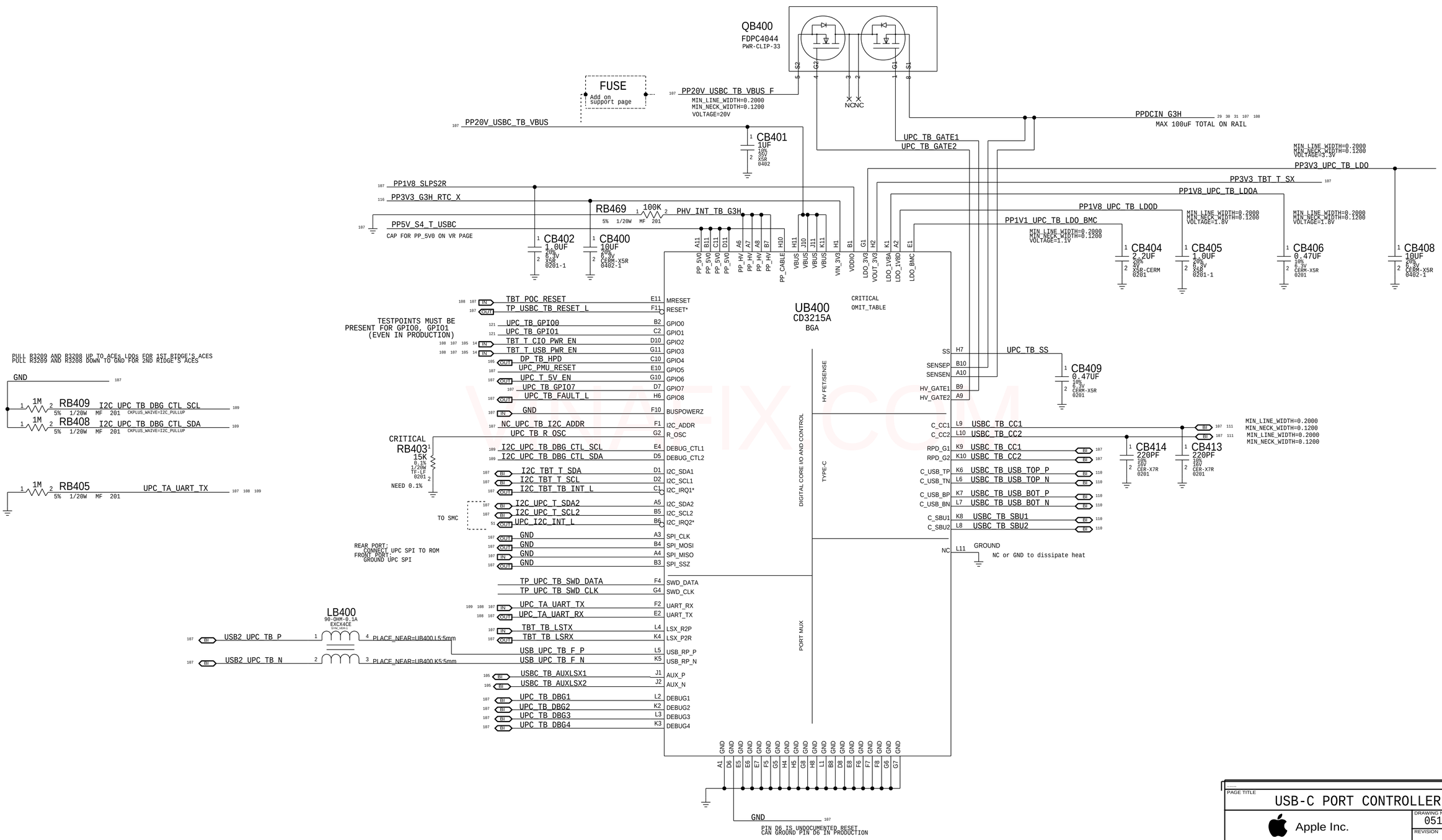

BOM_COST_GROUP=USB-C

PAGE TITLE	USB-C PORT CONTROLLER B
Apple Inc.	DRAWING NUMBER 051-02643 SIZE D
	REVISION 4.0.0
	BRANCH evt-0
	PAGE 114 OF 200
	SHEET 109 OF 131

NOTICE OF PROPRIETARY PROPERTY:
THE INFORMATION CONTAINED HEREIN IS THE PROPRIETARY PROPERTY OF APPLE INC.
THE POSESSOR AGREES TO THE FOLLOWING:
I TO MAINTAIN THIS DOCUMENT IN CONFIDENCE
II NOT TO REPRODUCE OR COPY IT
III NOT TO REVEAL OR PUBLISH IT IN WHOLE OR PART
IV ALL RIGHTS RESERVED

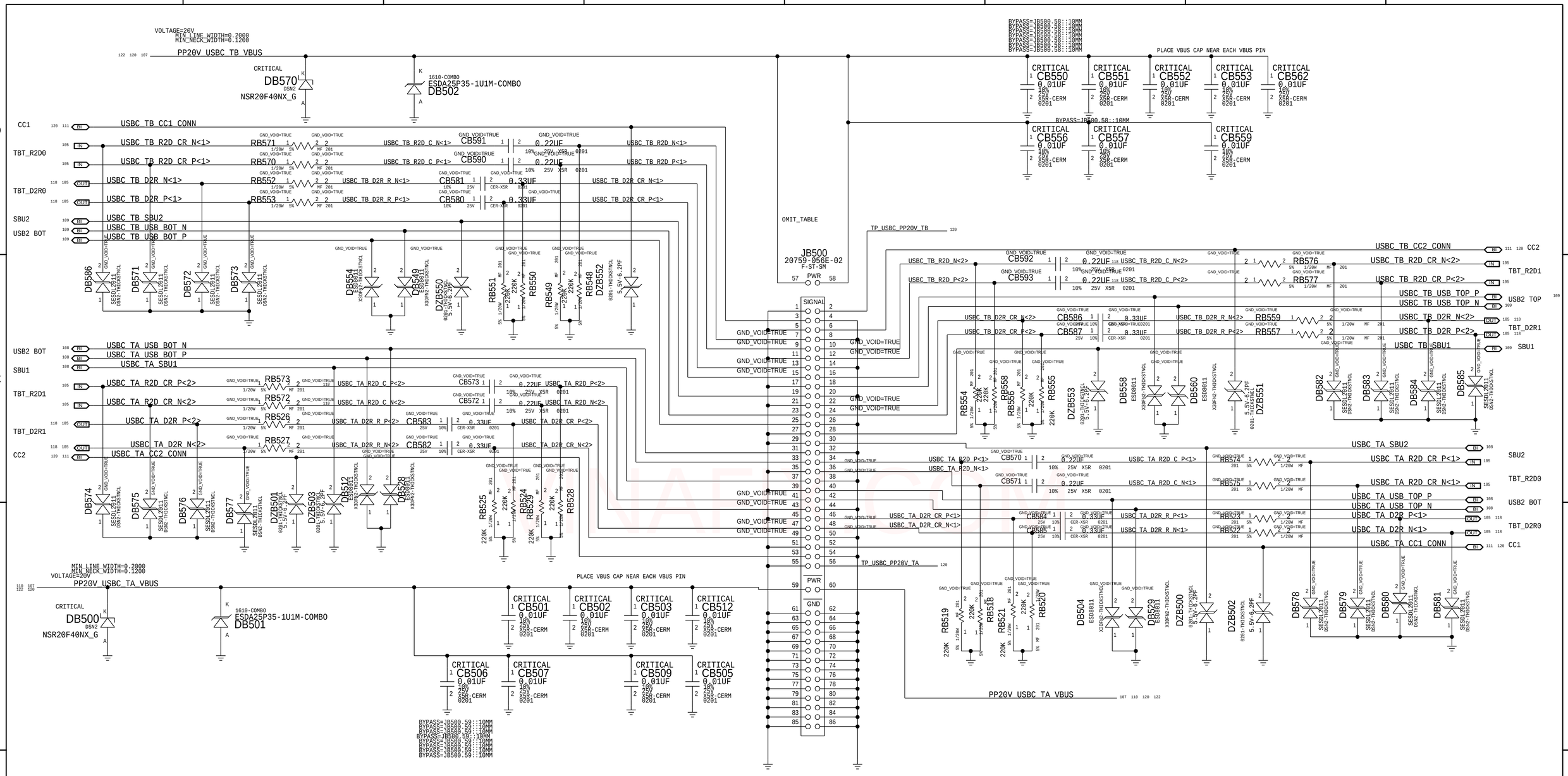

LAST CHANGE: Wed Apr 1 22:57:37 2015

PAGE TITLE
USB-C CONNECTOR A

Apple Inc.

DRAWING NUMBER 051-02643
SIZE D
REVISION 4.0.0
BRANCH evt-0
PAGE 115 OF 200
SHEET 110 OF 131

NOTICE OF PROPRIETARY PROPERTY:
THE INFORMATION CONTAINED HEREIN IS THE PROPRIETARY PROPERTY OF APPLE INC.
THE POSESSOR AGREES TO THE FOLLOWING:
I TO MAINTAIN THIS DOCUMENT IN CONFIDENCE
II NOT TO REPRODUCE OR COPY IT
III NOT TO REVEAL OR PUBLISH IT IN WHOLE OR PART
IV ALL RIGHTS RESERVED

TA CC Protection

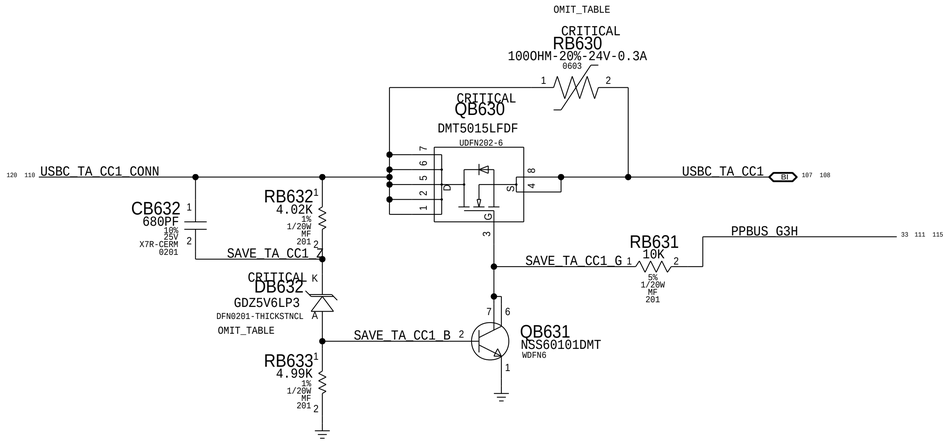

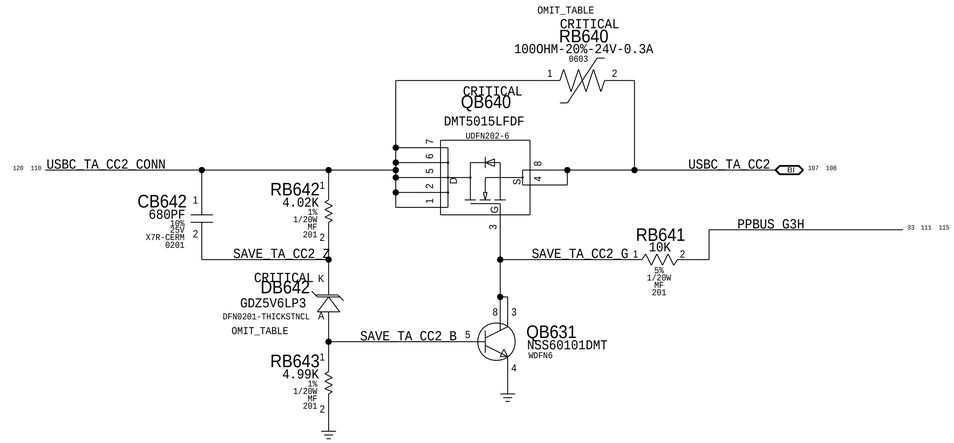

TB CC Protection

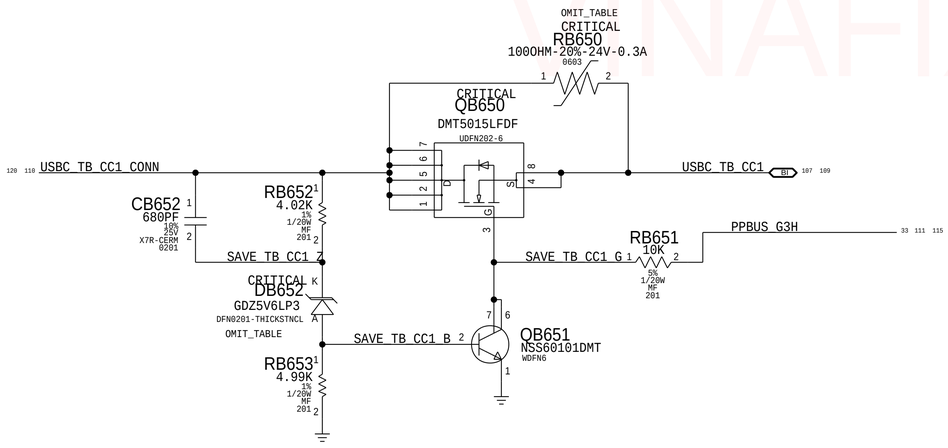

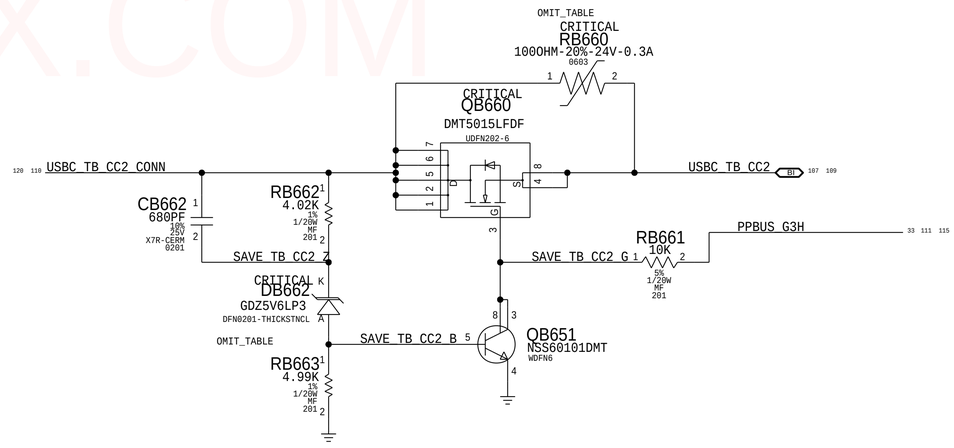

PART NUMBER	QTY	DESCRIPTION	REFERENCE DES	CRITICAL	BOM OPTION
371S00181	4	DIODE,ZENER,5.6V,250MW,DFN0201	DB632,DB642,DB652,DB662	CRITICAL	
740S00050	4	FUSE,THRMSTR,PTC,470OHM,24V,60MA,0603	RB630,RB640,RB650,RB660	CRITICAL	

BOM_COST_GROUP=USB-C

DESIGN: X1032/MLB_P4BP
LAST CHANGE: Fri Jan 6 16:01:21 2017

PAGE TITLE
USBC T Connector Support

Apple Inc.

DRAWING NUMBER 051-02643
SIZE D
REVISION 4.0.0
BRANCH evt-0
PAGE 116 OF 200
SHEET 111 OF 131

NOTICE OF PROPRIETARY PROPERTY:
THE INFORMATION CONTAINED HEREIN IS THE PROPRIETARY PROPERTY OF APPLE INC.
THE POSESSOR AGREES TO THE FOLLOWING:
I TO MAINTAIN THIS DOCUMENT IN CONFIDENCE
II NOT TO REPRODUCE OR COPY IT
III NOT TO REVEAL OR PUBLISH IT IN WHOLE OR PART
IV ALL RIGHTS RESERVED

VINAFIX.COM

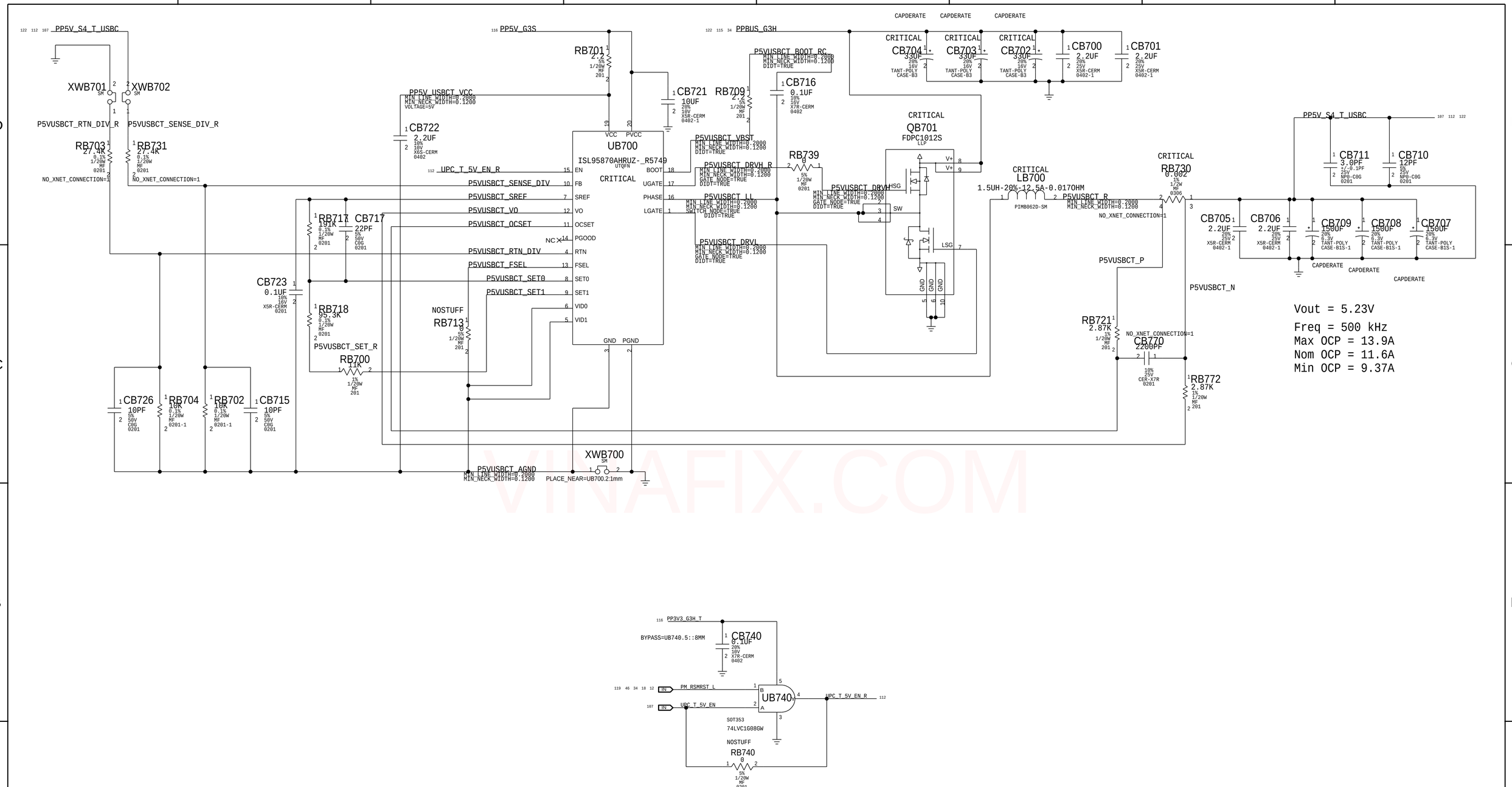

BOM_COST_GROUP=USB-C

VINAFIX.COM

PAGE TITLE
USB-C T 5V VR

Apple Inc.

DRAWING NUMBER 051-02643
SIZE D
REVISION 4.0.0
BRANCH evt-0
PAGE 117 OF 200
SHEET 112 OF 131

NOTICE OF PROPRIETARY PROPERTY:
THE INFORMATION CONTAINED HEREIN IS THE PROPRIETARY PROPERTY OF APPLE INC.
THE POSESSOR AGREES TO THE FOLLOWING:
I TO MAINTAIN THIS DOCUMENT IN CONFIDENCE
II NOT TO REPRODUCE OR COPY IT
III NOT TO REVEAL OR PUBLISH IT IN WHOLE OR PART
IV ALL RIGHTS RESERVED

VINAFIX.COM

BOM_COST_GROUP=GRAPHICS

SYNC_MASTER=j600_copy SYNC_DATE=02/01/2017

PAGE TITLE

GDDR5 VRAM FB 3

Apple Inc.

DRAWING NUMBER 051-02643	SIZE D
REVISION 4.0.0	
BRANCH evt-0	
PAGE 118 OF 200	
SHEET 113 OF 131	

NOTICE OF PROPRIETARY PROPERTY:

THE INFORMATION CONTAINED HEREIN IS THE PROPRIETARY PROPERTY OF APPLE INC.
THE POSESSOR AGREES TO THE FOLLOWING:

I TO MAINTAIN THIS DOCUMENT IN CONFIDENCE

II NOT TO REPRODUCE OR COPY IT

III NOT TO REVEAL OR PUBLISH IT IN WHOLE OR PART

IV ALL RIGHTS RESERVED

VINAFIX.COM

BOM_COST_GROUP=GRAPHICS

SYNC_MASTER=j600_copy SYNC_DATE=02/01/2017

PAGE TITLE

GDDR5 VRAM FB 4

Apple Inc.

DRAWING NUMBER	051-02643
SIZE	D
REVISION	4.0.0
BRANCH	evt-0
PAGE	119 OF 200
SHEET	114 OF 131

NOTICE OF PROPRIETARY PROPERTY:

THE INFORMATION CONTAINED HEREIN IS THE PROPRIETARY PROPERTY OF APPLE INC.
THE POSESSOR AGREES TO THE FOLLOWING:

I TO MAINTAIN THIS DOCUMENT IN CONFIDENCE

II NOT TO REPRODUCE OR COPY IT

III NOT TO REVEAL OR PUBLISH IT IN WHOLE OR PART

IV ALL RIGHTS RESERVED

PBUS & High Side

122 68 PPBUS_G3H
- PPBUS_G3H — MIN_LINE_WIDTH=0.6000, MIN_NECK_WIDTH=0.1200, VOLTAGE=13.1V, MAKE_BASE=TRUE — 55 119 122 74
- PPBUS_G3H — 53
- PPBUS_G3H — 53
- PPBUS_G3H — 53
- PPBUS_G3H — 53
- PPBUS_G3H — 58
- PPBUS_G3H — 53
- PPBUS_G3H — 34 112 122
- PPBUS_G3H — 65
- PPBUS_G3H — 62 63
- PPBUS_G3H — 33 111
- PPBUS_G3H — 77
- PPBUS_G3H — 55
- PPBUS_G3H — 55
- PPBUS_G3H — 81

53 PPBUS_HS_CPU
- PPBUS_HS_CPU — MIN_LINE_WIDTH=0.6000, MIN_NECK_WIDTH=0.1200, VOLTAGE=13.1V, MAKE_BASE=TRUE — 122 124
- PPBUS_HS_CPU — 70
- PPBUS_HS_CPU — 71
- PPBUS_HS_CPU — 72
- PPBUS_HS_CPU — 74
- PPBUS_HS_CPU — 78
- PPBUS_HS_CPU — 74
- PPBUS_HS_CPU — 69

58 PPBUS_HS_GPU
- PPBUS_HS_GPU — MIN_LINE_WIDTH=0.6000, MIN_NECK_WIDTH=0.1200, VOLTAGE=13.1V, MAKE_BASE=TRUE — 101 119 124
- PPBUS_HS_GPU — 98
- PPBUS_HS_GPU — 104
- PPBUS_HS_GPU — 98 101
- PPBUS_HS_GPU — 98

53 PPBUS_HS_OTH5V
- PPBUS_HS_OTH5V — MIN_LINE_WIDTH=0.6000, MIN_NECK_WIDTH=0.1200, VOLTAGE=13.1V, MAKE_BASE=TRUE
- PPBUS_HS_OTH5V — 73

53 PPBUS_HS_3V3G3H_T
- PPBUS_HS_3V3G3H_T — MIN_LINE_WIDTH=0.6000, MIN_NECK_WIDTH=0.1200, VOLTAGE=13.1V, MAKE_BASE=TRUE
- PPBUS_HS_3V3G3H_T — 73

53 PPBUS_HS_3V3G3HRTC_X
- PPBUS_HS_3V3G3HRTC_X — MIN_LINE_WIDTH=0.6000, MIN_NECK_WIDTH=0.1200, VOLTAGE=13.1V, MAKE_BASE=TRUE
- PPBUS_HS_3V3G3HRTC_X — 67

CPU Rails

70 PPVCC_S0_CPU
- PPVCC_S0_CPU — MIN_LINE_WIDTH=0.6000, MIN_NECK_WIDTH=0.1200, VOLTAGE=1.52V, MAKE_BASE=TRUE — 119
- PPVCC_S0_CPU — 6 8 58
- PPVCC_S0_CPU — 10

71 PPVCCSA_S0_CPU
- PPVCCSA_S0_CPU — MIN_LINE_WIDTH=0.6000, MIN_NECK_WIDTH=0.1200, VOLTAGE=1.52V, MAKE_BASE=TRUE — 119
- PPVCCSA_S0_CPU — 8 58
- PPVCCSA_S0_CPU — 11

72 PPVCCGT_S0_CPU
- PPVCCGT_S0_CPU — MIN_LINE_WIDTH=0.2000, MIN_NECK_WIDTH=0.1200, VOLTAGE=1.52V, MAKE_BASE=TRUE — 119
- PPVCCGT_S0_CPU — 8 58
- PPVCCGT_S0_CPU — 11 122

122 78 PPVCCIO_S0_CPU
- PPVCCIO_S0_CPU — MIN_LINE_WIDTH=0.6000, MIN_NECK_WIDTH=0.1200, VOLTAGE=0.95V, MAKE_BASE=TRUE — 119
- PPVCCIO_S0_CPU — 5 8 10

DDR4 1.2V

74 PP1V2_S3
- PP1V2_S3 — MIN_LINE_WIDTH=0.2000, MIN_NECK_WIDTH=0.1200, VOLTAGE=2.5V, MAKE_BASE=TRUE — 119 122 123
- PP1V2_S3 — 24 25
- PP1V2_S3 — 21
- PP1V2_S3 — 22 23 26
- PP1V2_S3 — 54
- PP1V2_S3 — 79

54 PP1V2_S3_CPUDDR
- PP1V2_S3_CPUDDR — MIN_NECK_WIDTH=0.1200, MIN_LINE_WIDTH=0.2000, MAKE_BASE=TRUE, VOLTAGE=1.2V — 120
- PP1V2_S3_CPUDDR — 8
- PP1V2_S3_CPUDDR — 10 122

79 PP1V2_S0SW
- PP1V2_S0SW — MIN_LINE_WIDTH=0.2000, MIN_NECK_WIDTH=0.1200, VOLTAGE=2.5V, MAKE_BASE=TRUE — 119
- PP1V2_S0SW — 8

21 PP0V6_S3_MEM_VREFCA_A
- PP0V6_S3_MEM_VREFCA_A — MAKE_BASE=TRUE, VOLTAGE=0.6V — 22 23

21 PP0V6_S3_MEM_VREFCA_B
- PP0V6_S3_MEM_VREFCA_B — MAKE_BASE=TRUE, VOLTAGE=0.6V — 24 25

DDR4 0.6V VTT

74 PP0V6_S0_DDRVTT
- PP0V6_S0_DDRVTT — MIN_LINE_WIDTH=0.2000, MIN_NECK_WIDTH=0.1200, VOLTAGE=0.6V, MAKE_BASE=TRUE — 119
- PP0V6_S0_DDRVTT — 122
- PP0V6_S0_DDRVTT — 122
- PP0V6_S0_DDRVTT — 26
- PP0V6_S0_DDRVTT — 26

DDR4 2.5V

74 PP2V5_S3
- PP2V5_S3 — MIN_LINE_WIDTH=0.2000, MIN_NECK_WIDTH=0.1200, VOLTAGE=2.5V, MAKE_BASE=TRUE — 119 122 123
- PP2V5_S3 — 22 23
- PP2V5_S3 — 24 25
- PP2V5_S3 — 74

PMIC Buck 8 - PCH 1.05V Prime

54 PP1V05_PRIM
- PP1V05_PRIM — MIN_LINE_WIDTH=0.2000, MIN_NECK_WIDTH=0.1200, VOLTAGE=1.05V, MAKE_BASE=TRUE — 119
- PP1V05_PRIM — 16 17 80
- PP1V05_PRIM — 17
- PP1V05_PRIM — 16
- PP1V05_PRIM — 16
- PP1V05_PRIM — 16
- PP1V05_PRIM — 17
- PP1V05_PRIM — 16 17
- PP1V05_PRIM — 17
- PP1V05_PRIM — 18
- PP1V05_PRIM — 74

PMIC Buck8 SW2

78 PP1V05_S3
- PP1V05_S3 — MIN_LINE_WIDTH=0.2000, MIN_NECK_WIDTH=0.1200, VOLTAGE=1.05V, MAKE_BASE=TRUE — 119
- PP1V05_S3 — 6 8 11 46
- PP1V05_S3 — 69
- PP1V05_S3 — 8 11
- PP1V05_S3 — 46
- PP1V05_S3 — 77

PMIC HIO SW

76 PP1V05_S0SW
- PP1V05_S0SW — MIN_LINE_WIDTH=0.2000, MIN_NECK_WIDTH=0.1200, VOLTAGE=1.05V, MAKE_BASE=TRUE — 119
- PP1V05_S0SW — 6 8 11
- PP1V05_S0SW — 18

GPU Rails

101 98 PPVCORE_S0_GPU
- PPVCORE_S0_GPU — MIN_LINE_WIDTH=0.2000, MIN_NECK_WIDTH=0.1200, VOLTAGE=1.1V, MAKE_BASE=TRUE — 119 124
- PPVCORE_S0_GPU — 58 96 124

98 PPVDDCI_S0_GPU
- PPVDDCI_S0_GPU — MIN_LINE_WIDTH=0.2000, MIN_NECK_WIDTH=0.1200, VOLTAGE=1.4V, MAKE_BASE=TRUE — 119
- PPVDDCI_S0_GPU — 58 96 124
- PPVDDCI_S0_GPU — 96

122 98 PP1V5R1V35_S0_GPU_MEM
- PP1V5R1V35_S0_GPU_MEM — MIN_LINE_WIDTH=0.2000, MIN_NECK_WIDTH=0.1200, VOLTAGE=1.55V, MAKE_BASE=TRUE — 96 119
- PP1V5R1V35_S0_GPU_MEM — 99 100 124
- PP1V5R1V35_S0_GPU_MEM — 58

58 PP1V5R1V35_S0_GPU_IC
- PP1V5R1V35_S0_GPU_IC — MIN_LINE_WIDTH=0.2000, MIN_NECK_WIDTH=0.1200, VOLTAGE=1.5V, MAKE_BASE=TRUE — 97 124
- PP1V5R1V35_S0_GPU_IC — 96

122 104 PP1V8_GPU
- PP1V8_GPU — MIN_LINE_WIDTH=0.2000, MIN_NECK_WIDTH=0.1200, VOLTAGE=1.8V, MAKE_BASE=TRUE
- PP1V8_GPU — 58

122 58 PP1V8_S0_GPU
- PP1V8_S0_GPU — MIN_LINE_WIDTH=0.2000, MIN_NECK_WIDTH=0.1200, VOLTAGE=1.8V, MAKE_BASE=TRUE — 95 103
- PP1V8_S0_GPU — 96
- PP1V8_S0_GPU — 103
- PP1V8_S0_GPU — 102
- PP1V8_S0_GPU — 102
- PP1V8_S0_GPU — 101

104 PP3V3_S0_GPU
- PP3V3_S0_GPU — MIN_LINE_WIDTH=0.2000, MIN_NECK_WIDTH=0.1200, VOLTAGE=3.3V, MAKE_BASE=TRUE — 97 103
- PP3V3_S0_GPU — 96
- PP3V3_S0_GPU — 19
- PP3V3_S0_GPU — 95
- PP3V3_S0_GPU — 102
- PP3V3_S0_GPU — 102
- PP3V3_S0_GPU — 51 103
- PP3V3_S0_GPU — 98 101
- PP3V3_S0_GPU — 102
- PP3V3_S0_GPU — 94

Digital Ground

GND
- MIN_NECK_WIDTH=0.1000, MIN_LINE_WIDTH=0.2000

VINAFIX.COM

PAGE TITLE: Power Alias 1

Apple Inc.

DRAWING NUMBER	051-02643
SIZE	D
REVISION	4.0.0
BRANCH	evt-0
PAGE	120 OF 200
SHEET	115 OF 131

NOTICE OF PROPRIETARY PROPERTY:
THE INFORMATION CONTAINED HEREIN IS THE PROPRIETARY PROPERTY OF APPLE INC.
THE POSESSOR AGREES TO THE FOLLOWING:
I TO MAINTAIN THIS DOCUMENT IN CONFIDENCE
II NOT TO REPRODUCE OR COPY IT
III NOT TO REVEAL OR PUBLISH IT IN WHOLE OR PART
IV ALL RIGHTS RESERVED

1.8V G3S

79 PP1V8_G3S

PP1V8_G3S
MIN_LINE_WIDTH=0.5000
MIN_NECK_WIDTH=0.1200
VOLTAGE=1.8V
MAKE_BASE=TRUE

PP1V8_G3S 37 119
PP1V8_G3S 51
PP1V8_G3S 66
PP1V8_G3S 52 61
PP1V8_G3S 73
PP1V8_G3S 59 119
PP1V8_G3S 63
PP1V8_G3S 62
PP1V8_G3S 64
PP1V8_G3S 19
PP1V8_G3S 54
PP1V8_G3S 49
PP1V8_G3S 64
PP1V8_G3S 52
PP1V8_G3S 52
PP1V8_G3S 52
PP1V8_G3S 52 82
PP1V8_G3S 48

5V G3S

73 PP5V_G3S

PP5V_G3S
MIN_LINE_WIDTH=0.2000
MIN_NECK_WIDTH=0.1200
VOLTAGE=5V
MAKE_BASE=TRUE

PP5V_G3S 119 120
PP5V_G3S 65
PP5V_G3S 78 116
PP5V_G3S 74
PP5V_G3S 112
PP5V_G3S 69 70 71
PP5V_G3S 98 101
PP5V_G3S 98
PP5V_G3S 65
PP5V_G3S 65
PP5V_G3S 50
PP5V_G3S 82
PP5V_G3S 72
PP5V_G3S 81
PP5V_G3S 54 56
PP5V_G3S 51
PP5V_G3S 78 116
PP5V_G3S 34
PP5V_G3S 104
PP5V_G3S 59
PP5V_G3S 82
PP5V_G3S 126

3V3 G3H "T"

73 PP3V3_G3H_T

PP3V3_G3H_T
MIN_LINE_WIDTH=0.6000
MIN_NECK_WIDTH=0.1500
VOLTAGE=3.3V
MAKE_BASE=TRUE

PP3V3_G3H_T 119
PP3V3_G3H_T 79
PP3V3_G3H_T 79
PP3V3_G3H_T 79
PP3V3_G3H_T 79
PP3V3_G3H_T 56
PP3V3_G3H_T 48
PP3V3_G3H_T 79
PP3V3_G3H_T 104
PP3V3_G3H_T 55
PP3V3_G3H_T 112

3V3 G3H "X"

67 PP3V3_G3H_RTC_X

PP3V3_G3H_RTC_X
MIN_LINE_WIDTH=0.6000
MIN_NECK_WIDTH=0.1200
VOLTAGE=3.3V
MAKE_BASE=TRUE

PP3V3_G3H_RTC_X 120
PP3V3_G3H_RTC_X 79
PP3V3_G3H_RTC_X 104
PP3V3_G3H_RTC_X 31
PP3V3_G3H_RTC_X 30
PP3V3_G3H_RTC_X 126
PP3V3_G3H_RTC_X 82
PP3V3_G3H_RTC_X 67
PP3V3_G3H_RTC_X 67
PP3V3_G3H_RTC_X 77
PP3V3_G3H_RTC_X 55
PP3V3_G3H_RTC_X 79
PP3V3_G3H_RTC_X 65
PP3V3_G3H_RTC_X 76
PP3V3_G3H_RTC_X 79
PP3V3_G3H_RTC_X 76
PP3V3_G3H_RTC_X 76
PP3V3_G3H_RTC_X 29
PP3V3_G3H_RTC_X 55
PP3V3_G3H_RTC_X 67
PP3V3_G3H_RTC_X 126
PP3V3_G3H_RTC_X 131
PP3V3_G3H_RTC_X 34
PP3V3_G3H_RTC_X 100
PP3V3_G3H_RTC_X 109

79 PP3V3_S0SW_TBT_X

PP3V3_S0SW_TBT_X
MIN_LINE_WIDTH=0.2000
MIN_NECK_WIDTH=0.1200
VOLTAGE=3.3V
MAKE_BASE=TRUE

PP3V3_S0SW_TBT_X 119
PP3V3_S0SW_TBT_X 56

79 PP3V3_S0SW_TBT_T

PP3V3_S0SW_TBT_T
MIN_LINE_WIDTH=0.6000
MIN_NECK_WIDTH=0.1200
VOLTAGE=3.3V
MAKE_BASE=TRUE

PP3V3_S0SW_TBT_T 56

56 PP3V3_S0SW_TBT_X_SNS

PP3V3_S0SW_TBT_X_SNS
MIN_LINE_WIDTH=0.2000
MIN_NECK_WIDTH=0.1200
VOLTAGE=3.3V
MAKE_BASE=TRUE

PP3V3_S0SW_TBT_X_SNS 28 29 95 122
PP3V3_S0SW_TBT_X_SNS 14

56 PP3V3_S0SW_TBT_T_SNS

PP3V3_S0SW_TBT_T_SNS
MIN_LINE_WIDTH=0.2000
MIN_NECK_WIDTH=0.1200
VOLTAGE=3.3V
MAKE_BASE=TRUE

PP3V3_S0SW_TBT_T_SNS 95 106 107 122
PP3V3_S0SW_TBT_T_SNS 14

79 PP3V3_G3SSW_SNS

PP3V3_G3SSW_SNS
MIN_LINE_WIDTH=0.2000
MIN_NECK_WIDTH=0.1200
VOLTAGE=3.3V
MAKE_BASE=TRUE

PP3V3_G3SSW_SNS 53
PP3V3_G3SSW_SNS 53 54 55 56 58
PP3V3_G3SSW_SNS 54
PP3V3_G3SSW_SNS 53
PP3V3_G3SSW_SNS 56

56 PP3V3_G3H_SOCPMU

PP3V3_G3H_SOCPMU
MIN_LINE_WIDTH=0.2000
MIN_NECK_WIDTH=0.1200
VOLTAGE=3.3V
MAKE_BASE=TRUE

PP3V3_G3H_SOCPMU 119
PP3V3_G3H_SOCPMU 75
PP3V3_G3H_SOCPMU 76
PP3V3_G3H_SOCPMU 76

54 PP3V3_G3S_WLAN

PP3V3_G3S_WLAN
MIN_LINE_WIDTH=0.6000
MIN_NECK_WIDTH=0.1000
VOLTAGE=3.3V
MAKE_BASE=TRUE

PP3V3_G3S_WLAN 120
PP3V3_G3S_WLAN 36 37 122
PP3V3_G3S_WLAN 35

122 75 PPVCCPRIMCORE_PRIM_REG

PPVCCPRIMCORE_PRIM_REG
MIN_LINE_WIDTH=0.2000
MIN_NECK_WIDTH=0.1200
VOLTAGE=1.05V
MAKE_BASE=TRUE

PPVCCPRIMCORE_PRIM_REG 54

54 PP1V8_G3S_WLANBT_VDDIO

PP1V8_G3S_WLANBT_VDDIO
MIN_LINE_WIDTH=0.2000
MIN_NECK_WIDTH=0.1200
VOLTAGE=1.8V
MAKE_BASE=TRUE

PP1V8_G3S_WLANBT_VDDIO 120
PP1V8_G3S_WLANBT_VDDIO 19 35 36 37 122

55 PP3V3_G3H_DFR

PP3V3_G3H_DFR
MIN_LINE_WIDTH=0.2000
MIN_NECK_WIDTH=0.1200
VOLTAGE=3.3V
MAKE_BASE=TRUE

PP3V3_G3H_DFR 50

SSD 3V3_G3H AND PPBUS_G3H

55 PP3V3_G3H_SSD0_SNS

PP3V3_G3H_SSD0_SNS
MIN_LINE_WIDTH=0.2000
MIN_NECK_WIDTH=0.1200
VOLTAGE=3.3V
MAKE_BASE=TRUE

PP3V3_G3H_SSD0_SNS 87

55 PP3V3_G3H_SSD1_SNS

PP3V3_G3H_SSD1_SNS
MIN_LINE_WIDTH=0.2000
MIN_NECK_WIDTH=0.1200
VOLTAGE=3.3V
MAKE_BASE=TRUE

PP3V3_G3H_SSD1_SNS 92

55 PPBUS_G3H_SSD0_SNS

PPBUS_G3H_SSD0_SNS
MIN_LINE_WIDTH=0.6000
MIN_NECK_WIDTH=0.1200
VOLTAGE=13.1V
MAKE_BASE=TRUE

PPBUS_G3H_SSD0_SNS 87

55 PPBUS_G3H_SSD1_SNS

PPBUS_G3H_SSD1_SNS
MIN_LINE_WIDTH=0.2000
MIN_NECK_WIDTH=0.1200
VOLTAGE=3.3V
MAKE_BASE=TRUE

PPBUS_G3H_SSD1_SNS 92

3V3 G3S "T"

79 PP3V3_G3S_T

PP3V3_G3S_T
MIN_LINE_WIDTH=0.6000
MIN_NECK_WIDTH=0.1200
VOLTAGE=3.3V
MAKE_BASE=TRUE

PP3V3_G3S_T 65
PP3V3_G3S_T 65 120
PP3V3_G3S_T 66
PP3V3_G3S_T 49
PP3V3_G3S_T 61

3V3 G3S "X"

79 PP3V3_G3S_X

PP3V3_G3S_X
MIN_LINE_WIDTH=0.6000
MIN_NECK_WIDTH=0.1200
VOLTAGE=3.3V
MAKE_BASE=TRUE

PP3V3_G3S_X 119
PP3V3_G3S_X 54
PP3V3_G3S_X 82

VINAFIX.COM

PAGE TITLE
Power Alias 2

Apple Inc.

DRAWING NUMBER 051-02643
SIZE D
REVISION 4.0.0
BRANCH evt-0
PAGE 121 OF 200
SHEET 116 OF 131

NOTICE OF PROPRIETARY PROPERTY:
THE INFORMATION CONTAINED HEREIN IS THE PROPRIETARY PROPERTY OF APPLE INC.
THE POSESSOR AGREES TO THE FOLLOWING:
I TO MAINTAIN THIS DOCUMENT IN CONFIDENCE
II NOT TO REPRODUCE OR COPY IT
III NOT TO REVEAL OR PUBLISH IT IN WHOLE OR PART
IV ALL RIGHTS RESERVED

PEG X16 CPU-GPU

118 95	IN	PEG_GPU_D2R_P<7..0>	=PEG_D2R_P<7..0>	OUT 5
118 95	IN	PEG_GPU_D2R_N<7..0>	=PEG_D2R_N<7..0>	OUT 5
118 95	OUT	PEG_GPU_R2D_C_P<7..0>	=PEG_R2D_C_P<7..0>	IN 5
118 95	OUT	PEG_GPU_R2D_C_N<7..0>	=PEG_R2D_C_N<7..0>	IN 5

MAKE_BASE=TRUE

GPU Throttle

H9M Side (After LS)		GPU Side	
103 GFX_SELF_THROTTLE_1V8		GFX_SELF_THROTTLE_1V8	39
103 GFX_THROTTLE_1V8_L		GFX_THROTTLE_1V8_L	39

MAKE_BASE=TRUE

CPU Display Aliases

NC_DDI1_ML_C_P<3..0>	NO_TEST=1	NC_DDI1_ML_C_P<3..0>	IN 5
NC_DDI1_ML_C_N<3..0>	NO_TEST=1	NC_DDI1_ML_C_N<3..0>	IN 5
NC_DDI1_AUXCH_C_P	NO_TEST=1	NC_DDI1_AUXCH_C_P	IN 5
NC_DDI1_AUXCH_C_N	NO_TEST=1	NC_DDI1_AUXCH_C_N	IN 5
NC_DDI2_ML_C_P<3..0>	NO_TEST=1	NC_DDI2_ML_C_P<3..0>	IN 5
NC_DDI2_ML_C_N<3..0>	NO_TEST=1	NC_DDI2_ML_C_N<3..0>	IN 5
NC_DDI2_AUXCH_C_P	NO_TEST=1	NC_DDI2_AUXCH_C_P	IN 5
NC_DDI2_AUXCH_C_N	NO_TEST=1	NC_DDI2_AUXCH_C_N	IN 5
NC_DDI3_ML_P<3..0>	NO_TEST=1	NC_DDI3_ML_P<3..0>	IN 5
NC_DDI3_ML_N<3..0>	NO_TEST=1	NC_DDI3_ML_N<3..0>	IN 5
NC_DDI3_AUXCH_P	NO_TEST=1	NC_DDI3_AUXCH_P	IN 5
NC_DDI3_AUXCH_N	NO_TEST=1	NC_DDI3_AUXCH_N	IN 5

MAKE_BASE=TRUE

Thunderbolt Signals Through PEG

118 29	IN	PCIE_TBT_X_D2R_P<3..0>	=PEG_D2R_P<11..8>	OUT 5
118 29	IN	PCIE_TBT_X_D2R_N<3..0>	=PEG_D2R_N<11..8>	OUT 5
118 29	OUT	PCIE_TBT_X_R2D_C_P<3..0>	=PEG_R2D_C_P<11..8>	IN 5
118 29	OUT	PCIE_TBT_X_R2D_C_N<3..0>	=PEG_R2D_C_N<11..8>	IN 5
118 107	IN	PCIE_TBT_T_D2R_P<3..0>	=PEG_D2R_P<15..12>	OUT 5
118 107	IN	PCIE_TBT_T_D2R_N<3..0>	=PEG_D2R_N<15..12>	OUT 5
118 107	OUT	PCIE_TBT_T_R2D_C_P<3..0>	=PEG_R2D_C_P<15..12>	IN 5
118 107	OUT	PCIE_TBT_T_R2D_C_N<3..0>	=PEG_R2D_C_N<15..12>	IN 5

MAKE_BASE=TRUE

GPU ALIAS

93	IN	GPU_RESET_L	GPU_RESET_L	OUT 46 95 119
121 12	IN	EG_PEG_CLK100M_N	EG_PEG_CLK100M_N	OUT 95
121 12	IN	EG_PEG_CLK100M_P	EG_PEG_CLK100M_P	OUT 95

MAKE_BASE=TRUE

VINAFIX.COM

PAGE TITLE
Signal Alias

Apple Inc.

DRAWING NUMBER 051-02643
SIZE D
REVISION 4.0.0
BRANCH evt-0
PAGE 122 OF 200
SHEET 117 OF 131

NOTICE OF PROPRIETARY PROPERTY:
THE INFORMATION CONTAINED HEREIN IS THE PROPRIETARY PROPERTY OF APPLE INC.
THE POSESSOR AGREES TO THE FOLLOWING:
I TO MAINTAIN THIS DOCUMENT IN CONFIDENCE
II NOT TO REPRODUCE OR COPY IT
III NOT TO REVEAL OR PUBLISH IT IN WHOLE OR PART
IV ALL RIGHTS RESERVED

ICT TESTPOINTS , High Speed NO_TEST

PEG

117 95	PEG_GPU_D2R_N<7..0>	NO_TEST=1
117 95	PEG_GPU_D2R_P<7..0>	NO_TEST=1
117 95	PEG_GPU_R2D_C_N<7..0>	NO_TEST=1
117 95	PEG_GPU_R2D_C_P<7..0>	NO_TEST=1
117 29	PCIE_TBT_X_D2R_P<3..0>	NO_TEST=1
117 29	PCIE_TBT_X_D2R_N<3..0>	NO_TEST=1
117 29	PCIE_TBT_X_R2D_C_P<3..0>	NO_TEST=1
117 29	PCIE_TBT_X_R2D_C_N<3..0>	NO_TEST=1
117 107	PCIE_TBT_T_D2R_P<3..0>	NO_TEST=1
117 107	PCIE_TBT_T_D2R_N<3..0>	NO_TEST=1
107 105	PCIE_TBT_T_D2R_C_P<3..0>	NO_TEST=1
107 105	PCIE_TBT_T_D2R_C_N<3..0>	NO_TEST=1
29 27	PCIE_TBT_X_D2R_C_P<3..0>	NO_TEST=1
29 27	PCIE_TBT_X_D2R_C_N<3..0>	NO_TEST=1
29 27	PCIE_TBT_X_R2D_P<3..0>	NO_TEST=1
29 27	PCIE_TBT_X_R2D_N<3..0>	NO_TEST=1
107 105	PCIE_TBT_T_R2D_P<3..0>	NO_TEST=1
107 105	PCIE_TBT_T_R2D_N<3..0>	NO_TEST=1
117 107	PCIE_TBT_T_R2D_C_P<3..0>	NO_TEST=1
117 107	PCIE_TBT_T_R2D_C_N<3..0>	NO_TEST=1
95	PEG_GPU_D2R_C_N<7..0>	NO_TEST=1
95	PEG_GPU_D2R_C_P<7..0>	NO_TEST=1
95	PEG_GPU_R2D_N<7..0>	NO_TEST=1
95	PEG_GPU_R2D_P<7..0>	NO_TEST=1

CPU/PCH CLK

12 6	CPU_CLK24M_NSSC_CLK_N	NO_TEST=1
12 6	CPU_CLK24M_NSSC_CLK_P	NO_TEST=1
12 6	CPU_CLK100M_PCIBCLK_N	NO_TEST=1
12 6	CPU_CLK100M_PCIBCLK_P	NO_TEST=1
12 6	CPU_CLK100M_BCLK_N	NO_TEST=1
12 6	CPU_CLK100M_BCLK_P	NO_TEST=1
20 18	NC_ITPXDP_CLK100MN	
20 18	NC_ITPXDP_CLK100MP	

MUX

93 5	DP_INT_TG_ML_N<3..0>	NO_TEST=1
93 5	DP_INT_TG_ML_P<3..0>	NO_TEST=1
93 5	DP_INT_TG_AUX_N	NO_TEST=1
93 5	DP_INT_TG_AUX_P	NO_TEST=1
103 93	DP_INT_EG_ML_N<3..0>	NO_TEST=1
103 93	DP_INT_EG_ML_P<3..0>	NO_TEST=1
103 93	DP_INT_EG_AUX_N	NO_TEST=1
103 93	DP_INT_EG_AUX_P	NO_TEST=1

H9M ESPI

39 20 12	ESPI_IO<0>	NO_TEST=1
39 20 12	ESPI_IO<1>	NO_TEST=1
39 20 12	ESPI_IO<2>	NO_TEST=1
39 20 12	ESPI_IO<3>	NO_TEST=1
39	ESPI_IO_R<0>	NO_TEST=1
39	ESPI_IO_R<1>	NO_TEST=1
	ESPI_IO_R<3>	
118 39		NO_TEST=1
118 39	ESPI_IO_R<3>	NO_TEST=1

118 29 27	TBT_X_XTAL25M_OUT	NO_TEST=1
29 27	TBT_X_XTAL25M_IN	NO_TEST=1
107 105	TBT_T_XTAL25M_OUT	NO_TEST=1
107 105	TBT_T_XTAL25M_IN	NO_TEST=1
103 102	GPU_CLK_IN	NO_TEST=1

H9M SSD NAND

86 85 84 83	PCIE_SSD0_R2D_P<3..0>	NO_TEST=1
86 85 84 83	PCIE_SSD0_R2D_N<3..0>	NO_TEST=1
86 85 84 83 41	PCIE_SSD0_D2R_P<3..0>	NO_TEST=1
86 85 84 83 41	PCIE_SSD0_D2R_N<3..0>	NO_TEST=1
86 85 84 83 41	PCIE_SSD0_R2D_C_P<3..0>	NO_TEST=1
86 85 84 83 41	PCIE_SSD0_R2D_C_N<3..0>	NO_TEST=1
86 85 84 83	PCIE_SSD0_D2R_C_P<3..0>	NO_TEST=1
86 85 84 83	PCIE_SSD0_D2R_C_N<3..0>	NO_TEST=1
91 90 89 88	PCIE_SSD1_R2D_P<3..0>	NO_TEST=1
91 90 89 88	PCIE_SSD1_R2D_N<3..0>	NO_TEST=1
91 90 89 88 41	PCIE_SSD1_D2R_P<3..0>	NO_TEST=1
91 90 89 88 41	PCIE_SSD1_D2R_N<3..0>	NO_TEST=1
91 90 89 88 41	PCIE_SSD1_R2D_C_P<3..0>	NO_TEST=1
91 90 89 88 41	PCIE_SSD1_R2D_C_N<3..0>	NO_TEST=1
91 90 89 88	PCIE_SSD1_D2R_C_P<3..0>	NO_TEST=1
91 90 89 88	PCIE_SSD1_D2R_C_N<3..0>	NO_TEST=1

XTAL

118 29 27	TBT_X_XTAL25M_OUT	NO_TEST=1
12	PCH_CLK24M_XTALOUT	NO_TEST=1
77	PMU_XTAL1	NO_TEST=1
77	PMU_XTAL2	NO_TEST=1

BAFFIN FRAME BUFFER

99 97	FB_A1_CS_L	NO_TEST=1
99 97	FB_A0_CKE_L	NO_TEST=1
99 97	FB_A1_CKE_L	NO_TEST=1
99 97	FB_A0_WE_L	NO_TEST=1
99 97	FB_A1_WE_L	NO_TEST=1
100 97	FB_B1_CS_L	NO_TEST=1
100 97	FB_B0_CKE_L	NO_TEST=1
100 97	FB_B1_CKE_L	NO_TEST=1
118 100 97	FB_B0_WE_L	NO_TEST=1
118 100 97	FB_B1_WE_L	NO_TEST=1
100 97	FB_B0_CLK_P	NO_TEST=1
100 97	FB_B1_CLK_N	NO_TEST=1
100 97	FB_B1_CLK_P	NO_TEST=1
100 97	FB_B0_RAS_L	NO_TEST=1
100 97	FB_B1_RAS_L	NO_TEST=1
100 97	FB_B0_CAS_L	NO_TEST=1
100 97	FB_B1_CAS_L	NO_TEST=1
100 97	FB_B0_CS_L	NO_TEST=1
99 97	FB_A0_DQ<31..0>	NO_TEST=1
99 97	FB_A1_DQ<31..0>	NO_TEST=1
99 97	FB_A0_A<8..0>	NO_TEST=1
99 97	FB_A1_A<8..0>	NO_TEST=1
99 97	FB_A0_WCLK_N<1..0>	NO_TEST=1
99 97	FB_A0_WCLK_P<1..0>	NO_TEST=1
99 97	FB_A1_WCLK_N<1..0>	NO_TEST=1
99 97	FB_A1_WCLK_P<1..0>	NO_TEST=1
99 97	FB_A0_EDC<3..0>	NO_TEST=1
99 97	FB_A1_EDC<3..0>	NO_TEST=1
99 97	FB_A0_DBI_L<3..0>	NO_TEST=1
99 97	FB_A1_DBI_L<3..0>	NO_TEST=1
99 97	FB_A0_ABI_L	NO_TEST=1
99 97	FB_A1_ABI_L	NO_TEST=1
99 97	FB_A0_CLK_N	NO_TEST=1
99 97	FB_A0_CLK_P	NO_TEST=1
99 97	FB_A1_CLK_N	NO_TEST=1
99 97	FB_A1_CLK_P	NO_TEST=1
99 97	FB_A0_RAS_L	NO_TEST=1
99 97	FB_A1_RAS_L	NO_TEST=1
99 97	FB_A0_CAS_L	NO_TEST=1
99 97	FB_A1_CAS_L	NO_TEST=1
99 97	FB_A0_CS_L	NO_TEST=1
100 97	FB_B0_CLK_N	NO_TEST=1
100 97	FB_B0_DQ<31..0>	NO_TEST=1
100 97	FB_B1_DQ<31..0>	NO_TEST=1
100 97	FB_B0_A<8..0>	NO_TEST=1
100 97	FB_B1_A<8..0>	NO_TEST=1
100 97	FB_B0_WCLK_N<1..0>	NO_TEST=1
100 97	FB_B0_WCLK_P<1..0>	NO_TEST=1
100 97	FB_B1_WCLK_N<1..0>	NO_TEST=1
100 97	FB_B1_WCLK_P<1..0>	NO_TEST=1
100 97	FB_B0_EDC<3..0>	NO_TEST=1
100 97	FB_B1_EDC<3..0>	NO_TEST=1
100 97	FB_B0_DBI_L<3..0>	NO_TEST=1
100 97	FB_B1_DBI_L<3..0>	NO_TEST=1
100 97	FB_B0_ABI_L	NO_TEST=1
100 97	FB_B1_ABI_L	NO_TEST=1

USB-C X

32 27	USBC_XB_D2R_N<2..1>	NO_TEST=1
32 27	USBC_XB_D2R_P<2..1>	NO_TEST=1
32 27	USBC_XA_D2R_P<2..1>	NO_TEST=1
32	USBC_XB_R2D_C_P<2..1>	NO_TEST=1
32 27	USBC_XA_D2R_N<2..1>	NO_TEST=1
32	USBC_XB_R2D_C_N<2..1>	NO_TEST=1
32	USBC_XA_R2D_C_P<2..1>	NO_TEST=1
32	USBC_XA_R2D_C_N<2..1>	NO_TEST=1

DMI

13 5	DMI_S2N_P<3..0>	NO_TEST=1
13 5	DMI_S2N_N<3..0>	NO_TEST=1
13 5	DMI_N2S_P<3..0>	NO_TEST=1
13 5	DMI_N2S_N<3..0>	NO_TEST=1

DP - CPU/ACE

103 27	DP_X_SNK0_ML_C_N<3..0>	NO_TEST=1
103 27	DP_X_SNK0_ML_C_P<3..0>	NO_TEST=1
27	DP_X_SNK0_ML_N<3..0>	NO_TEST=1
27	DP_X_SNK0_ML_P<3..0>	NO_TEST=1
103 27	DP_X_SNK1_ML_C_N<3..0>	NO_TEST=1
103 27	DP_X_SNK1_ML_C_P<3..0>	NO_TEST=1
27	DP_X_SNK1_ML_N<3..0>	NO_TEST=1
27	DP_X_SNK1_ML_P<3..0>	NO_TEST=1
105 103	DP_T_SNK0_ML_C_N<3..0>	NO_TEST=1
105 103	DP_T_SNK0_ML_C_P<3..0>	NO_TEST=1
105	DP_T_SNK0_ML_N<3..0>	NO_TEST=1
105	DP_T_SNK0_ML_P<3..0>	NO_TEST=1
105 103	DP_T_SNK1_ML_C_N<3..0>	NO_TEST=1
105 103	DP_T_SNK1_ML_C_P<3..0>	NO_TEST=1
105	DP_T_SNK1_ML_N<3..0>	NO_TEST=1
105	DP_T_SNK1_ML_P<3..0>	NO_TEST=1
103 27	DP_X_SNK0_AUXCH_C_P	NO_TEST=1
103 27	DP_X_SNK0_AUXCH_C_N	NO_TEST=1
105 103	DP_T_SNK0_AUXCH_C_P	NO_TEST=1
105 103	DP_T_SNK0_AUXCH_C_N	NO_TEST=1
27	DP_X_SNK0_AUXCH_P	NO_TEST=1
27	DP_X_SNK0_AUXCH_N	NO_TEST=1
105	DP_T_SNK0_AUXCH_P	
105	DP_T_SNK0_AUXCH_N	
103 27	DP_X_SNK1_AUXCH_C_P	NO_TEST=1
103 27	DP_X_SNK1_AUXCH_C_N	NO_TEST=1
105 103	DP_T_SNK1_AUXCH_C_P	NO_TEST=1
105 103	DP_T_SNK1_AUXCH_C_N	NO_TEST=1
27	DP_X_SNK1_AUXCH_P	NO_TEST=1
27	DP_X_SNK1_AUXCH_N	NO_TEST=1
105	DP_T_SNK1_AUXCH_P	
105	DP_T_SNK1_AUXCH_N	

CPU/EDP

MEM

26 23 22 7	MEM_A_CLK_P<1..0>	NO_TEST=1
26 23 22 7	MEM_A_CLK_N<1..0>	NO_TEST=1
125 23 22	MEM_A_DQ<63..0>	NO_TEST=1
125 25 24	MEM_B_DQ<63..0>	NO_TEST=1
125 23 22	MEM_A_DQS_P<7..0>	NO_TEST=1
125 23 22	MEM_A_DQS_N<7..0>	NO_TEST=1
125 25 24	MEM_B_DQS_P<7..0>	NO_TEST=1
125 25 24	MEM_B_DQS_N<7..0>	NO_TEST=1
26 25 24 7	MEM_B_CLK_P<1..0>	NO_TEST=1
26 25 24 7	MEM_B_CLK_N<1..0>	NO_TEST=1

WIFI

37	50_0_ANT	NO_TEST=1
37	50_1_ANT	NO_TEST=1
37	50_2_ANT	NO_TEST=1
37	50_0_COM	NO_TEST=1
37	50_1_COM	NO_TEST=1
37	50_2_COM	NO_TEST=1
37	50_A_0_DIPLEXER	NO_TEST=1
37 36	50_A_0_MATCH	NO_TEST=1
37	50_G_0_DIPLEXER	NO_TEST=1
37 36	50_G_0_MATCH	NO_TEST=1
37	50_A_1_DIPLEXER	NO_TEST=1
37 36	50_A_1_MATCH	NO_TEST=1
37	50_G_1_DIPLEXER	NO_TEST=1
37 36	50_G_1_MATCH	NO_TEST=1
37	50_A_2_DIPLEXER	NO_TEST=1
37 36	50_A_2_MATCH	NO_TEST=1
37	50_G_2_DIPLEXER	NO_TEST=1
37 36	50_G_2_MATCH	NO_TEST=1

USB-C T

110 105	USBC_TA_D2R_P<2..1>	NO_TEST=1
110 105	USBC_TA_D2R_N<2..1>	NO_TEST=1
110	USBC_TA_R2D_C_P<2..1>	NO_TEST=1
110	USBC_TA_R2D_C_N<2..1>	NO_TEST=1
110 105	USBC_TB_D2R_P<2..1>	NO_TEST=1
110 105	USBC_TB_D2R_N<2..1>	NO_TEST=1
110	USBC_TB_R2D_C_P<2..1>	NO_TEST=1
110	USBC_TB_R2D_C_N<2..1>	NO_TEST=1

PCH/AR

36 14	PCH_PCIE_WLAN_D2R_N	NO_TEST=1
36 14	PCH_PCIE_WLAN_D2R_P	NO_TEST=1
36 14	PCH_PCIE_WLAN_R2D_C_N	NO_TEST=1
36 14	PCH_PCIE_WLAN_R2D_C_P	NO_TEST=1
36	PCH_PCIE_WLAN_D2R_C_P	NO_TEST=1
36	PCH_PCIE_WLAN_D2R_C_N	NO_TEST=1
36	PCH_PCIE_WLAN_R2D_P	NO_TEST=1
36	PCH_PCIE_WLAN_R2D_N	NO_TEST=1

PCH/SOC

47 41	PCIE_SOC_R2D_P<3..0>	NO_TEST=1
47 41	PCIE_SOC_R2D_N<3..0>	NO_TEST=1
41 14	PCIE_SOC_D2R_P<3..0>	NO_TEST=1
41 14	PCIE_SOC_D2R_N<3..0>	NO_TEST=1
47 14	PCIE_SOC_R2D_C_P<3..0>	NO_TEST=1
47 14	PCIE_SOC_R2D_C_N<3..0>	NO_TEST=1
41	PCIE_SOC_D2R_C_P<3..0>	NO_TEST=1
41	PCIE_SOC_D2R_C_N<3..0>	NO_TEST=1

VINAFIX.COM

PAGE TITLE
High speed No Testpoints

Apple Inc.

DRAWING NUMBER 051-02643 SIZE D
REVISION 4.0.0
BRANCH evt-0
PAGE 123 OF 200
SHEET 118 OF 131

NOTICE OF PROPRIETARY PROPERTY:
THE INFORMATION CONTAINED HEREIN IS THE PROPRIETARY PROPERTY OF APPLE INC.
THE POSESSOR AGREES TO THE FOLLOWING:
I TO MAINTAIN THIS DOCUMENT IN CONFIDENCE
II NOT TO REPRODUCE OR COPY IT
III NOT TO REVEAL OR PUBLISH IT IN WHOLE OR PART
IV ALL RIGHTS RESERVED

DFU AND FCT TESTPOINTS placed on top side of MLB, oppsite from CPU.

DFU TEST POINTS <RDAR://31619312>

Possibly useful panda signals

TPC4H8	TP-P5	SOC_DEBUGPRT_RX	40 126
TPC4H9	TP-P5	SOC_DEBUGPRT_TX	40 126
TPC402	TP-P5	DEBUG_JTAG_SOC_TDO	39 126
TPC403	TP-P5	DEBUG_JTAG_SOC_TDI	39 126
TPC404	TP-P5	PP1V8_SLPS2R	80
TPC405	TP-P5	SOC_SOCHOT_L	38 77 126
TPC406	TP-P5	I2C_PWR_SDA	39 51
TPC407	TP-P5	I2C_UPC_SCL	39 51
TPC4E9	TP-P5	I2C_UPC_SDA	39 51
TPC4Z5	TP-P5	I2C_PWR_SCL	39 51

PSU Power input

TPC441	TP-P5	PPBUS_HS_GPU	101 115 124
TPC442	TP-P5	PP2V5_S3	115 122 123
TPC443	TP-P5	PP0V6_S0_DDRVTT	115 119
TPC444	TP-P5	PP3V3_S5	80
TPC4Z6	TP-P5	PPVBAT_G3H_CHGR_REG	68
TPC4Z7	TP-P5	PPDCIN_G3H_CHGR	68 122
TPC448	TP-P5		
TPC449	TP-P5		
TPC450	TP-P5		

DFU NON-CUSTOMER-FACING USB PORTS

PLACE IN ACCESSIBLE BOARD AREA

SWDL

TPC408	TP-P5	USB3_TEST_D2R_N	OUT 14
TPC409	TP-P5	USB3_TEST_D2R_P	OUT 14
TPC410	TP-P5	USB3_TEST_R2D_N	IN 14
TPC411	TP-P5	USB3_TEST_R2D_P	IN 14
TPC412	TP-P5		
TPC413	TP-P5		
TPC414	TP-P5		
TPC415	TP-P5		
TPC416	TP-P5	USB2_UPC_TA_N	BI 14 107
TPC417	TP-P5	USB2_UPC_TA_P	BI 14 107
TPC418	TP-P5		

DZC400, DZC401, DZC402, DZC403: 5.5V-0.28PF 0201-THICKSTNCL

DZC408, DZC409: 5.5V-0.28PF 0201-THICKSTNCL

NON-CUSTOMER-FACING USB PORTS FOR ETHERNET DONGLE(Bristol OS Testing)

PLACE IN ACCESSIBLE BOARD AREA

Ethenet

TPC422	TP-P5	USB3_TEST2_D2R_N	OUT 14
TPC423	TP-P5	USB3_TEST2_D2R_P	OUT 14
TPC424	TP-P5	USB3_TEST2_R2D_N	IN 14
TPC425	TP-P5	USB3_TEST2_R2D_P	IN 14
TPC426	TP-P5		
TPC427	TP-P5		
TPC428	TP-P5		
TPC429	TP-P5		
TPC419	TP-P5	USB2_UPC_TB_N	BI 14 107
TPC420	TP-P5	USB2_UPC_TB_P	BI 14 107
TPC421	TP-P5		
TPC430	TP-P5	PP5V_G3S	116 119 120

DZC410, DZC411, DZC412, DZC413: 5.5V-0.28PF 0201-THICKSTNCL

DZC406, DZC407: 5.5V-0.28PF 0201-THICKSTNCL

Battery

TPC431	1 TP-P5	SYS_DETECT_L	67
TPC432	1 TP-P5	SMBUS_3V3_BATT_SCL	67
TPC433	1 TP-P5	SMBUS_3V3_BATT_SDA	67
TPC434	1 TP-P5	TP_BMON_IOUT	67
TPC435	1 TP-P5	PPVBAT_G3H_CONN	67 68 119
TPC436	1 TP-P5	PPVBAT_G3H_CONN	67 68 119
TPC437	1 TP-P5	PPVBAT_G3H_CONN	67 68 119
TPC4D5	1 TP-P5	PPVBAT_G3H_CONN	67 68 119
TPC4D6	1 TP-P5	PPVBAT_G3H_CONN	67 68 119
TPC4D7	1 TP-P5	PPVBAT_G3H_CONN	67 68 119
TPC4I7	1 TP-P5	PPVBAT_G3H_CONN	67 68 119
TPC4Z8	TP-P5	SYS_DETECT	67
TPC4D8	1 TP-P5		
TPC4D9	1 TP-P5		
TPC4E0	1 TP-P5		
TPC4E1	1 TP-P5		
TPC4E2	1 TP-P5		
TPC440	1 TP-P5		
TPC4I6	1 TP-P5		

AUDIO_JACK

120 64	IN	AUD_CONN_HP_LEFT	FUNC_TEST=TRUE
120 64	IN	AUD_CONN_HP_RIGHT	FUNC_TEST=TRUE
120 64	IN	AUD_CONN_RING2	FUNC_TEST=TRUE
120 64	IN	AUD_CONN_SLEEVE	FUNC_TEST=TRUE
120 64	IN	AUD_CONN_HP_SENSE_L	FUNC_TEST=TRUE
120 64	IN	AUD_CONN_HP_SENSE_R	FUNC_TEST=TRUE
120 64	IN	AUD_CONN_TIP_SENSE	FUNC_TEST=TRUE
120 64	IN	AUD_CONN_SLEEVE_XW	FUNC_TEST=TRUE
120 64	IN	AUD_CONN_RING2_XW	FUNC_TEST=TRUE
		GND	X2
TPC4Z9	TP-P5	GND_AUDIO_CODEC	61 122

FAN

TPC4N0	1 TP-P5	SMC_FAN_0_PWM	39 59
TPC4N1	1 TP-P5	SMC_FAN_0_TACH	39 59
TPC4N2	1 TP-P5	SMC_FAN_1_PWM	39 59
TPC4N3	1 TP-P5	SMC_FAN_1_TACH	39 59
TPC4N4	1 TP-P5	PP1V8_G3S	59 116 119
TPC4N5	1 TP-P5	PP1V8_G3S	59 116 119
TPC4N6	1 TP-P5		
TPC4N7	1 TP-P5		

DEBUG MOJO

TPC451	1 TP-P5	PCH_UART_DEBUG_R2D	15 29 126
TPC452	1 TP-P5	PCH_UART_DEBUG_D2R	15 29 126
TPC4F1	1 TP-P5	SMC_DEBUGPRT_TX	39 47 126
TPC4F2	1 TP-P5	SMC_DEBUGPRT_RX	39 47 126
TPC453	1 TP-P5		

Soc Access w/o Potassium

TPC454	1 TP-P5	SOC_USB_VBUS	29 38 126
TPC455	1 TP-P5	USB_SOC_TYPEC_P	29 126
TPC456	1 TP-P5	USB_SOC_TYPEC_N	29 126
TPC457	1 TP-P5	PMU_ACTIVE_READY	30 38 77 131
TPC458	1 TP-P5	SOC_FORCE_DFU	29 38 77 131
TPC459	1 TP-P5	SOC_DFU_STATUS	29 38 131
TPC460	1 TP-P5	UPC_XB_DBG3	29 31
TPC461	1 TP-P5	UPC_XB_DBG4	29 31
TPC462	1 TP-P5	SOC_DOCK_CONNECT	30 31 39
TPC464	1 TP-P5		

Power Sequence,status,charging

TPC466	TP-P5	PP3V3_G3H_SOCPMU	116 119
TPC468	TP-P5	PPBUS_G3H	55 115
TPC469	TP-P5	PP1V2_S3	115 122 123
TPC470	TP-P5	PPVCC_S0_CPU	115
TPC471	TP-P5	PP5V_G3S	120
TPC472	TP-P5	PP1V5R1V35_S0_GPU_MEM	96 115
TPC473	TP-P5	PPVCORE_S0_GPU	115 124
TPC4L6	TP-P5	CPU_PWRGD	6 13 121
TPC474	TP-P5	PMU_ONOFF_R_L	48
TPC475	TP-P5	PM_SLP_S3_L	12 14 27 105 131
TPC476	TP-P5	PM_SLP_S4_L	12
TPC477	TP-P5	PM_SLP_S5_L	12
TPC479	TP-P5	PP0V6_S0_DDRVTT	115 119
TPC481	TP-P5	PP1V05_S3	115
TPC482	TP-P5	PM_SYSRST_L	12 18 46 121
TPC483	TP-P5	PM_PCH_SYS_PWROK	12 46
TPC484	TP-P5	PM_PCH_PWROK	12 35 46 121
TPC485	TP-P5	PLT_RST_L	12 20 46
TPC486	TP-P5	PM_RSMRST_L	12 18 34 46 122
TPC487	TP-P5	PM_SLP_S0_L	12 39 77 141
TPC488	TP-P5	SMC_FIXTURE_MODE_L	39 47
TPC489	TP-P5	PP1V8_G3S	37 116
TPC490	TP-P5	PP5V_G3S	116 119 120
TPC491	TP-P5	PP3V3_G3H_T	116
TPC492	TP-P5	PP3V3_G3H_SSD0_SNS	116
TPC493	TP-P5	PP3V3_S0SW_TBT_X	116
TPC495	TP-P5	PP3V3_G3H_SOCPMU	116 119
TPC4B4	TP-P5	PPVDDCPU_AWAKE	80
TPC4B6	1 TP-P5	PVDDQ_EN_R	74
TPC4B7	1 TP-P5	PVCCIO_EN	77 78
TPC4B8	1 TP-P5	PP0V9_SLPDDR	80
TPC4B9	1 TP-P5	PP1V1_SLPDDR	80
TPC4C0	1 TP-P5	PP1V1_SLPS2R	80
TPC4C1	1 TP-P5	PP1V8_AWAKE	80
TPC4J1	1 TP-P5	SMC_SYSRST_L	39 46 121
TPC4C4	1 TP-P5	PP1V8_SLPS2R_PMUVDDGPIO	75
TPC4C5	1 TP-P5	P1V1_SLPDDR_SOCFET_EN	76 77 131
TPC4C6	1 TP-P5	PMU_CLK32K_WLANBT	36 77
TPC4C7	1 TP-P5	SOC_WDOG	39 77
TPC4C8	1 TP-P5	PMU_CLK32K_SOC	39 77
TPC4C9	1 TP-P5	PMU_SYS_ALIVE	38 39 77 87 92 93
TPC496	TP-P5		

BOM_COST_GROUP=DEBUG

Power Sequence,status,charging

TPC4D0	1 TP-P5	P5VG3S_EN	73 77
TPC4D1	1 TP-P5	PP0V8_SLPS2R	80
TPC4D2	1 TP-P5	PPVDDCPUSRAM_AWAKE	80
TPC4D3	1 TP-P5	P5VG3S_PGOOD	73 77
TPC4D4	1 TP-P5	CPUVR_PGOOD	77 80
TPC4L7	TP-P5	PPVCCGT_S0_CPU	115
TPC4F3	TP-P5	PPVCCSA_S0_CPU	115
TPC4L0	TP-P5	PPVCCIO_S0_CPU	115
TPC4F4	TP-P5	PP1V05_S0SW	115
TPC4F5	TP-P5	PP1V2_S0SW	115
TPC4F6	TP-P5	PP1V05_PRIM	115
TPC4F7	TP-P5	PP1V8_S5	80
TPC4F8	TP-P5	PP3V0_G3H_RTC	80
TPC4F9	TP-P5	ALL_SYS_PWRGD	46 77
TPC4G0	TP-P5	PCH_RTC_RESET_L	12 77
TPC4G1	TP-P5	PM_THRMTRIP_L	6 46
TPC4G2	TP-P5	PM_PWRBTN_L	18 80
TPC4G3	TP-P5	CPU_PROCHOT_R_L	6
TPC4G4	TP-P5	PPVDDCI_S0_GPU	115
TPC4G5	TP-P5	DISP_GCON_RESET_L	93
TPC4G6	TP-P5	GPU_RESET_L	46 95 117
TPC4G7	TP-P5	PM_MEMVTT_EN	5 74
TPC4G8	TP-P5	ESPI_RESET_L	12 20 39
TPC4G9	TP-P5	GFX_THROTTLE_L	103
TPC4H0	TP-P5	PMU_COLD_RESET_L	39 64 77 121
TPC4H1	TP-P5	PP0V82_SLPDDR	80
TPC4H2	TP-P5	CHGR_EN_MVR	67 68
TPC4H3	TP-P5	PMU_PVDDMAIN_EN	73 77
TPC4H4	TP-P5	UPC_PMU_RESET	39 67 77 107
TPC4H5	TP-P5	P3V3G3S_EN	77 79
TPC4H6	TP-P5	PP3V3_G3S_X	116
TPC4H7	TP-P5	P1V8G3S_EN	77 79 131
TPC4L1	TP-P5	SSD_PMU_RESET_L	39 47 87 92
TPC4L2	TP-P5	PP2V5_NAND_SSD0	83 84 85 86 87 124
TPC4I0	TP-P5	PP2V5_NAND_SSD1	88 89 90 91 92 124
TPC4I1	TP-P5	PP0V9_SSD0	83 84 85 86 87 124
TPC4I2	TP-P5	PP0V9_SSD1	88 89 90 91 92 124
TPC4I3	TP-P5	PP1V8_SSD1	88 89 90 91 92 124
TPC4I4	TP-P5	PP1V8_SSD0	83 84 85 86 87 124
TPC4I5	TP-P5	PP1V2_AWAKE	80

Soc Access with Potassium

TPC499	1 TP-P5	USBC_XB_SBU1	31 32
TPC4A0	1 TP-P5	USBC_XB_SBU2	31 32
TPC4A1	1 TP-P5	USBC_XA_CC1_CONN	32 33
TPC4A2	1 TP-P5	PP20V_USBC_XA_VBUS	29 32 120 122
TPC4A3	1 TP-P5		

Left Side - Top Layer

119 68 55 53 29 122	PPDCIN_G3H	TP-P5	TPC4AB
119 68 55 53 29 122	PPDCIN_G3H	TP-P5	TPC4AA
119 68 55 53 29 122	PPDCIN_G3H	TP-P5	TPC4A5
119 68 55 53 29 122	PPDCIN_G3H	TP-P5	TPC4A6
119 68 55 53 29 122	PPDCIN_G3H	TP-P5	TPC4A7
119 68 55 53 29 122	PPDCIN_G3H	TP-P5	TPC4A8
119 68 55 53 29 122	PPDCIN_G3H	TP-P5	TPC4E5
119 68 55 53 29 122	PPDCIN_G3H	TP-P5	TPC4E6
		TP-P5	TPC4A9
		TP-P5	TPC4B0
		TP-P5	TPC4B1
		TP-P5	TPC4B2
		TP-P5	TPC4B3
		TP-P5	TPC4E7
		TP-P5	TPC4E8

PAGE TITLE: DFU TEST POINTS

Apple Inc.

DRAWING NUMBER: 051-02643 SIZE: D

REVISION: 4.0.0

BRANCH: evt-0

PAGE: 124 OF 200

SHEET: 119 OF 131

NOTICE OF PROPRIETARY PROPERTY:
THE INFORMATION CONTAINED HEREIN IS THE PROPRIETARY PROPERTY OF APPLE INC.
THE POSESSOR AGREES TO THE FOLLOWING:
I TO MAINTAIN THIS DOCUMENT IN CONFIDENCE
II NOT TO REPRODUCE OR COPY IT
III NOT TO REVEAL OR PUBLISH IT IN WHOLE OR PART
IV ALL RIGHTS RESERVED

VINAFIX.COM

FCT TEST POINTS (TOP SIDE OF MLB)

DFR/MESA (FCT)

Ref	Pin	Part	Net	Sheets
TPC500	1	TP-P5		
TPC501	1	TP-P5		
TPC502	1	TP-P5	MIPI_DFR_CLK_CONN_FILT_P	50
TPC503	1	TP-P5	DFR_DISP_VSYNC	50
TPC505	1	TP-P5	DFR_DISP_TE	40 50
TPC504	1	TP-P5	MIPI_DFR_CLK_CONN_FILT_N	50
TPC506	1	TP-P5		
TPC507	1	TP-P5	MIPI_DFR_DATA_CONN_FILT_P	50
TPC524	1	TP-P5	MIPI_DFR_DATA_CONN_FILT_N	50
TPC510	1	TP-P5	DFR_DISP_RESET_L	40 50
TPC516	1	TP-P5	PP3V3_G3HSW_DFR	50 120
TPC508	1	TP-P5	DFR_DISP_INT	38 50
TPC518	1	TP-P5	PP3V3_G3HSW_DFR	50 120
TPC511	1	TP-P5		
TPC512	1	TP-P5		
TPC521	1	TP-P5	TP_DFR_TOUCH_PANEL_DETECT	50
TPC522	1	TP-P5	DFR_LID_OPEN_L	50
TPC515	1	TP-P5		
TPC520	1	TP-P5		
TPC527	1	TP-P5	SPI_DFR_MISO_R	47 50
TPC528	1	TP-P5	SPI_DFR_CS_L	40 50
TPC533	1	TP-P5	DFR_TOUCH_INT_L	39 50
TPC535	1	TP-P5	DFR_TOUCH_CLK32K_RESET_L	40 50
TPC534	1	TP-P5	I2C_DFR_SCL_R	50 52
TPC536	1	TP-P5	I2C_DFR_SDA_R	50 52
TPC538	1	TP-P5	DFR_TOUCH_RESET_L	40 50
TPC530	1	TP-P5	SPI_DFR_MOSI	47 50
TPC525	1	TP-P5		
TPC526	1	TP-P5		
TPC529	1	TP-P5	SPI_DFR_CLK	47 50
TPC539	1	TP-P5	TP_DFR_TOUCH_ROM_WC	50
TPC540	1	TP-P5	PP1V8_SLPS2RSW_DFR	50 52 120
TPC542	1	TP-P5	PP5V_G3S_DFR_FILT	50
TPC541	1	TP-P5	PP1V8_SLPS2RSW_DFR	50 52 120
TPC544	1	TP-P5	SPI_MESA_MISO_CONN	48
TPC543	1	TP-P5	PP1V8_MESA_CONN	48
TPC550	1	TP-P5	SPI_MESA_CLK_CONN	48
TPC531	1	TP-P5		
TPC532	1	TP-P5		
TPC546	1	TP-P5	MESA_INT_CONN	48
TPC547	1	TP-P5	SPI_MESA_MOSI_CONN	48
TPC548	1	TP-P5	MESA_BOOST_EN_CONN	48
TPC552	1	TP-P5	PP16V0_MESA_CONN	48
TPC537	1	TP-P5		
TPC554	1	TP-P5	PP3V0_MESA_CONN	48 120
TPC555	1	TP-P5	PP3V0_MESA_CONN	48 120
TPC545	1	TP-P5		
TPC553	1	TP-P5		

TBT/DP

Ref	Pin	Part	Net	Sheets
TPC5L7	1	TP-P5	TBT_X_HDMI_DDC_DATA	29 95
TPC5L8	1	TP-P5	TBT_X_HDMI_DDC_CLK	29 95
TPC5L9	1	TP-P5	TBT_T_HDMI_DDC_DATA	95 107
TPC5N0	1	TP-P5	TBT_T_HDMI_DDC_CLK	95 107

FAN , Keyboard,Trackpad Test Points

Ref	Pin	Part	Net	Sheets
TPC556	1	TP-P5	GND_FAN	65 120
TPC557	1	TP-P5	GND_FAN	65 120
TPC558	1	TP-P5	PP5V_G3S_FAN_CONN	65 120
TPC559	1	TP-P5	PP5V_G3S_FAN_CONN	65 120
TPC560	1	TP-P5	FAN_LT_TACH	59 65
TPC561	1	TP-P5	FAN_RT_TACH	59 65
TPC562	1	TP-P5	FAN_LT_PWM	59 65
TPC563	1	TP-P5	FAN_RT_PWM	59 65
TPC564	1	TP-P5		
TPC565	1	TP-P5		
TPC5Z1	1	TP-P5	GND_FAN	65 120
TPC5Z2	1	TP-P5	GND_FAN	65 120
TPC5Z9	1	TP-P5	I2C_TPAD3V3_SCL	65 66
TPC5Y0	1	TP-P5	TPAD_KBD_WAKE_L	47 65 66
TPC566	1	TP-P5	I2C_TPAD3V3_SDA	65 66
TPC567	1	TP-P5	TPAD3V3_ACTUATOR_DISABLE_L	65 66
TPC568	1	TP-P5	I2C_KBD_SDA	65
TPC569	1	TP-P5	TPAD3V3_SPI_INT_L	65 66
TPC5Z8	1	TP-P5	IPD_LID_OPEN	47 50 65
TPC5Z3	1	TP-P5	PP5V_G3S	116 119 120
TPC5Z4	1	TP-P5	PP5V_G3S	116 119 120
TPC5Z7	1	TP-P5	PMU_RSLOC_RST_R_L	65
TPC5Z5	1	TP-P5	PP3V3_G3H_RTC_X	116
TPC571	1	TP-P5		
TPC588	1	TP-P5	ACT_GND	65 120
TPC586	1	TP-P5	ACT_GND	65 120
TPC579	1	TP-P5	KBD_BLC_GSSOUT	65
TPC578	1	TP-P5	TPAD3V3_SPI_EN	65 66
TPC585	1	TP-P5	PP3V3_G3S_T	65 116 120
TPC584	1	TP-P5	PP3V3_G3S_T	65 116 120
TPC583	1	TP-P5	KBD_BLC_GSLAT	65
TPC582	1	TP-P5	PP5V_G3S_TPAD_CONN	65
TPC581	1	TP-P5	KBD_BLC_GSSCK	65
TPC580	1	TP-P5	SPI_TPAD3V3_CLK	65 66
TPC591	1	TP-P5	PPVIN_G3H_TPAD_FUSE	65 120
TPC590	1	TP-P5	PPVIN_G3H_TPAD_FUSE	65 120
TPC589	1	TP-P5	PPVIN_G3H_TPAD_FUSE	65 120
TPC577	1	TP-P5	KBD_BLC_GSSIN	65
TPC576	1	TP-P5	SPI_TPAD3V3_MISO	65 66
TPC575	1	TP-P5	KBD_BLC_XBLANK	65
TPC574	1	TP-P5	SPI_TPAD3V3_CS_L	65 66
TPC572	1	TP-P5	SPI_TPAD3V3_MOSI	65 66
TPC573	1	TP-P5	I2C_KBD_SCL	65
TPC587	1	TP-P5		
TPC5M0	1	TP-P5	KBD_INT_L	65

WIRELESS

Ref	Pin	Part	Net	Sheets
TPC5H9	1	TP-P5	PP3V3_G3S_WLAN	116
TPC5I0	1	TP-P5	PP1V8_G3S_WLANBT_VDDIO	116
TPC5L0	1	TP-P5	PPVIN_RFLDO_WLANBT	36 122
TPC5L1	1	TP-P5	PP1V2_WLANBT	36 122
TPC5L2	1	TP-P5	PP1V5_WLANBT	36 122

HALL EFFECT

Ref	Pin	Part	Net	Sheets
TPC5I1	1	TP-P5	LID_OPEN_LEFT	47 64
TPC5I2	1	TP-P5	LID_OPEN_RIGHT	47 64

MEMORY

Ref	Pin	Part	Net	Sheets
TPC5I3	1	TP-P5	PVDDQ_PGOOD	74 77
TPC5I7	1	TP-P5	PP1V2_S3_CPUDDR	115

AUDIO

Ref	Pin	Part	Net	Sheets
TPC592	1	TP-P5	AUD_DMIC0_CLK_CONN	64
TPC593	1	TP-P5	AUD_DMIC0_DATA_CONN	64
TPC594	1	TP-P5	PP1V8_DMIC	64
TPC595	1	TP-P5	AUD_DMIC1_CLK_CONN	64
TPC596	1	TP-P5	AUD_DMIC1_DATA_CONN	64
TPC597	1	TP-P5		
TPC5A1	1	TP-P5	SPKRCONN_LW_OUTN	62 120
TPC5B1	1	TP-P5	SPKRCONN_LW_OUTN	62 120
TPC5B4	1	TP-P5	SPKRCONN_LW_OUTN	62 120
TPC5A0	1	TP-P5	SPKRCONN_LW_OUTP	62 120
TPC5G0	1	TP-P5	SPKRCONN_LW_OUTP	62 120
TPC5G1	1	TP-P5	SPKRCONN_LW_OUTP	62 120
TPC598	1	TP-P5	SPKRCONN_LT_OUTN	62 120
TPC5G2	1	TP-P5	SPKRCONN_LT_OUTN	62 120
TPC5M3	1	TP-P5	SPKRCONN_LT_OUTN	62 120
TPC599	1	TP-P5	SPKRCONN_LT_OUTP	62 120
TPC5M4	1	TP-P5	SPKRCONN_LT_OUTP	62 120
TPC5M5	1	TP-P5	SPKRCONN_LT_OUTP	62 120
TPC5A6	1	TP-P5	SPKRCONN_RW_OUTP	63 120
TPC5G6	1	TP-P5	SPKRCONN_RW_OUTP	63 120
TPC5M7	1	TP-P5	SPKRCONN_RW_OUTP	63 120
TPC5Y9	1	TP-P5	SPKRCONN_RW_OUTN	63 120
TPC5G8	1	TP-P5	SPKRCONN_RW_OUTN	63 120
TPC5M9	1	TP-P5	SPKRCONN_RW_OUTN	63 120
TPC5A3	1	TP-P5	SPKRCONN_RT_OUTN	63 120
TPC5L3	1	TP-P5	SPKRCONN_RT_OUTN	63 120
TPC5L4	1	TP-P5	SPKRCONN_RT_OUTN	63 120
TPC5A4	1	TP-P5	SPKRCONN_RT_OUTP	63 120
TPC5L5	1	TP-P5	SPKRCONN_RT_OUTP	63 120
TPC5L6	1	TP-P5	SPKRCONN_RT_OUTP	63 120
TPC5B8	1	TP-P5	AUD_CONN_RING_SENSE	64
TPC5B7	1	TP-P5	AUD_CONN_RING2_XW	64 119
TPC5B6	1	TP-P5	AUD_CONN_TIP_SENSE	64 119
TPC5B5	1	TP-P5	AUD_CONN_HP_SENSE_R	64 119
TPC5A7	1	TP-P5		
TPC5B3	1	TP-P5	AUD_CONN_HP_SENSE_L	64 119
TPC5A8	1	TP-P5	AUD_CONN_HP_LEFT	64 119
TPC5A9	1	TP-P5	AUD_CONN_HP_RIGHT	64 119
TPC5B0	1	TP-P5	AUD_CONN_RING2	64 119
TPC5B2	1	TP-P5	AUD_CONN_SLEEVE	64 119
TPC5K0	1	TP-P5		
TPC5K1	1	TP-P5	AUD_CONN_SLEEVE_XW	64 119
TPC5A5	1	TP-P5	SPKR_ID0	40 63
TPC5A2	1	TP-P5		

EDP , CAMERA,ALS

Ref	Pin	Part	Net	Sheets
TPC5C0	1	TP-P5	EDP_INT_AUX_N	82 93
TPC5C1	1	TP-P5		
TPC5C2	1	TP-P5	EDP_INT_AUX_P	82 93
TPC5C3	1	TP-P5	EDP_PANEL_PWR_BUF_EN	82
TPC5C4	1	TP-P5		
TPC5C9	1	TP-P5	TP_LCD_IRQ_L	82
TPC5C8	1	TP-P5	EDP_INT_ML_P<0>	82 93
TPC5C5	1	TP-P5	DP_INT_HPD	82 93
TPC5C6	1	TP-P5	EDP_INT_ML_N<0>	82 93
TPC5C7	1	TP-P5	LCD_FSS	82 93
TPC5D5	1	TP-P5	EDP_INT_ML_P<2>	82 93
TPC5D3	1	TP-P5	EDP_INT_ML_N<2>	82 93
TPC5D1	1	TP-P5	EDP_INT_ML_N<1>	82 93
TPC5D2	1	TP-P5	EDP_INT_ML_P<1>	82 93
TPC5D0	1	TP-P5		
TPC5D7	1	TP-P5	I2C_BKLT_SDA	81 82
TPC5E0	1	TP-P5	EDP_INT_ML_P<3>	82 93
TPC5D9	1	TP-P5	I2C_BKLT_SCL	81 82
TPC5D8	1	TP-P5	EDP_INT_ML_N<3>	82 93
TPC5D4	1	TP-P5		
TPC5E1	1	TP-P5	I2C_TCON_SDA	51 82
TPC5E4	1	TP-P5	MIPI_FTCAM_DATA_CONN_N<0>	82
TPC5D6	1	TP-P5		
TPC5E3	1	TP-P5	I2C_TCON_SCL	51 82
TPC5F2	1	TP-P5	I2C_CAM_ISOL_SDA	82
TPC5F1	1	TP-P5	MIPI_FTCAM_CLK_CONN_P	82
TPC5F0	1	TP-P5	I2C_CAM_ISOL_SCL	82
TPC5E9	1	TP-P5	MIPI_FTCAM_CLK_CONN_N	82
TPC5E8	1	TP-P5	I2C_ALS_SCL	40 52
TPC5E2	1	TP-P5		
TPC5E6	1	TP-P5	MIPI_FTCAM_DATA_CONN_P<0>	82
TPC5E7	1	TP-P5	I2C_ALS_SDA	40 52
TPC5F7	1	TP-P5	PP5V_S0_ALSCAM_F	82
TPC5E5	1	TP-P5		
TPC5F9	1	TP-P6	PPVIN_S0SW_LCDBKLT_R	81
TPC5F3	1	TP-P5	PPVOUT_S0_LCDBKLT	81 82 122
TPC5F4	1	TP-P5	PP3V3_S0SW_LCD	51 82 120
TPC5F6	1	TP-P5	PP5V_S0SW_LCD	82
TPC5F5	1	TP-P5	PP3V3_S0SW_LCD	51 82 120
TPC5F8	1	TP-P5		
TPC5M1	1	TP-P5	BKLT_PWM_MLB2TCON	82

USBC (PLACE NEAR CONNECTOR)

Ref	Pin	Part	Net	Sheets
TPC5G3	1	TP-P5	TP_USBC_PP20V_XB	32
TPC5N3	1	TP-P5	TP_USBC_PP20V_XA	32
TPC5G4	1	TP-P5	USBC_XA_SBU1	30 32
TPC5G5	1	TP-P5	USBC_XA_SBU2	30 32
TPC5G7	1	TP-P5	USBC_XA_CC2_CONN	32 33
TPC5G9	1	TP-P5	PP20V_USBC_XB_VBUS	29 32 120 122
TPC5H0	1	TP-P5	PP20V_USBC_XA_VBUS	29 32 119 120 122
TPC5H1	1	TP-P5	TP_USBC_PP20V_TB	110
TPC5H2	1	TP-P5	TP_USBC_PP20V_TA	110
TPC5H3	1	TP-P5	PP20V_USBC_TB_VBUS	107 110 120 122
TPC5H4	1	TP-P5	PP20V_USBC_TA_VBUS	107 110 120 122
TPC5I8	1	TP-P5	PP20V_USBC_XA_VBUS	29 32 119 120 122
TPC5I9	1	TP-P5	PP20V_USBC_XA_VBUS	29 32 119 120 122
TPC5J1	1	TP-P5	PP20V_USBC_XB_VBUS	29 32 120 122
TPC5J0	1	TP-P5	PP20V_USBC_XA_VBUS	29 32 119 120 122
TPC5J2	1	TP-P5	PP20V_USBC_XB_VBUS	29 32 120 122
TPC5J3	1	TP-P5	PP20V_USBC_XB_VBUS	29 32 120 122
TPC5J4	1	TP-P5	PP20V_USBC_TA_VBUS	107 110 120 122
TPC5H5	1	TP-P5		
TPC5H6	1	TP-P5		
TPC5H7	1	TP-P5		
TPC5H8	1	TP-P5		
TPC5M2	1	TP-P5		
TPC5K2	1	TP-P5		
TPC5K3	1	TP-P5		
TPC5K4	1	TP-P5		
TPC5J5	1	TP-P5	PP20V_USBC_TA_VBUS	107 110 120 122
TPC5J6	1	TP-P5	PP20V_USBC_TA_VBUS	107 110 120 122
TPC5J7	1	TP-P5	PP20V_USBC_TB_VBUS	107 110 120 122
TPC5J8	1	TP-P5	PP20V_USBC_TB_VBUS	107 110 120 122
TPC5J9	1	TP-P5	PP20V_USBC_TB_VBUS	107 110 120 122
TPC5N9	1	TP-P5	USBC_XB_CC1_CONN	32 33
TPC5N8	1	TP-P5	USBC_XB_CC2_CONN	32 33
TPC5O1	1	TP-P5	USBC_TA_CC1_CONN	110 111
TPC5O2	1	TP-P5	USBC_TA_CC2_CONN	110 111
TPC5O3	1	TP-P5	USBC_TB_CC1_CONN	110 111
TPC5O4	1	TP-P5	USBC_TB_CC2_CONN	110 111

CORE OS DESBUG

PAGE TITLE: FCT TESTPOINTS 2

Apple Inc.

NOTICE OF PROPRIETARY PROPERTY:
THE INFORMATION CONTAINED HEREIN IS THE PROPRIETARY PROPERTY OF APPLE INC.
THE POSESSOR AGREES TO THE FOLLOWING:
I TO MAINTAIN THIS DOCUMENT IN CONFIDENCE
II NOT TO REPRODUCE OR COPY IT
III NOT TO REVEAL OR PUBLISH IT IN WHOLE OR PART
IV ALL RIGHTS RESERVED

DRAWING NUMBER: 051-02643 | SIZE: D
REVISION: 4.0.0
BRANCH: evt-0

ICT TEST POINTS, ICT BOUNDARY SCAN TESTPOINTS

CPU XDP and PCH Test-Points

18 6	TRUE	XDP_CPU_TCK
18 13	TRUE	XDP_PCH_TCK
18 6	TRUE	XDP_CPU_TDI
18 6	TRUE	XDP_CPU_TDO
18 13 6	TRUE	XDP_CPU_TRST_L
18 6	TRUE	XDP_CPU_TMS
18 13	TRUE	XDP_PCH_TMS
18 13	TRUE	XDP_PCH_TDI
18 13	TRUE	XDP_PCH_TDO
18 13 6	TRUE	XDP_CPU_PREQ_L
18 13 6	TRUE	XDP_CPU_PRDY_L
119 46 35 12	TRUE	PM_PCH_PWROK
119 46 18 12	TRUE	PM_SYSRST_L
18 13	TRUE	XDP_PCH_JTAGX
18 13		PCH_ITP_PMODE — FUNC_TEST=TRUE

H9M BOUNDARY SCAN TESTPOINTS ON FCT TESTPOINT PAGE

TP Debug ACE Nets (EE tests)

30	UPC_XA_GPIO0	TPC622
31	UPC_XB_GPIO0	TPC624
31	UPC_XB_GPIO1	TPC625
108	UPC_TA_GPIO0	TPC626
108	UPC_TA_GPIO1	TPC627
109	UPC_TB_GPIO0	TPC628
109	UPC_TB_GPIO1	TPC629

GPU ICT TESTPONTS

ACE

27 15	JTAG_TBT_X_TMS	FUNC_TEST=TRUE
107 105 27	JTAG_ISP_TDI	FUNC_TEST=TRUE
107 105 27	JTAG_ISP_TCK	FUNC_TEST=TRUE
107 105 27	XDP_JTAG_ISP_TDO	FUNC_TEST=TRUE
121 27	TBT_X_TEST_EN	FUNC_TEST=TRUE

WLAN

39 37	WLAN_JTAG_TMS	FUNC_TEST=TRUE
39 37	WLAN_JTAG_TCK	FUNC_TEST=TRUE
40 37	WLAN_JTAG_TDI	FUNC_TEST=TRUE
37 36	WLAN_JTAG_TDO	FUNC_TEST=TRUE
37 36	WLAN_JTAG_TRST_L	FUNC_TEST=TRUE
105 15	JTAG_TBT_T_TMS	FUNC_TEST=TRUE
39	TP_JTAG_SOC_TRST_L	FUNC_TEST=TRUE

GPU

103 102	GPU_JTAG_TCK	FUNC_TEST=TRUE
103 102	GPU_JTAG_TDI	FUNC_TEST=TRUE
103 102	GPU_JTAG_TDO	FUNC_TEST=TRUE
103 102	GPU_JTAG_TMS	FUNC_TEST=TRUE
103 102	GPU_JTAG_TRST_L	FUNC_TEST=TRUE
46 39	SMC_PCH_SYS_PWROK	FUNC_TEST=TRUE
46 39	SMC_PCH_PWROK	FUNC_TEST=TRUE
119 46 39	SMC_SYSRST_L	FUNC_TEST=TRUE
119 13 6	CPU_PWRGD	FUNC_TEST=TRUE
77 64 39 119	PMU_COLD_RESET_L	FUNC_TEST=TRUE
39	SOC_JTAG_SEL	FUNC_TEST=TRUE
38	SOC_TESTMODE	FUNC_TEST=TRUE
37 36	WLAN_JTAG_SEL	FUNC_TEST=TRUE
105	TBT_T_TEST_EN	FUNC_TEST=TRUE
121 27	TBT_X_TEST_EN	FUNC_TEST=TRUE

SSD BOUNDARY SCAN Test-Points

85 84 83 39 86	TRUE	SSD0_SWDIO_UART_D2R
85 84 83 39 86	TRUE	SSD0_SWCLK_UART_R2D
84 83	TRUE	SSD0_S4E0_JTAG_TDO
83	TRUE	SSD0_S4E0_JTAG_TDI
86 85 84 83	TRUE	SSD0_S4E_JTAG_SEL
85 84	TRUE	SSD0_S4E1_JTAG_TDO
121 86 85	TRUE	SSD0_S4E2_JTAG_TDO
86		SSD0_S4E3_JTAG_TDO
121 86 85	TRUE	SSD0_S4E2_JTAG_TDO
90 89 88 39 91	TRUE	SSD1_SWDIO_UART_D2R
90 89 88 39 91	TRUE	SSD1_SWCLK_UART_R2D
89 88	TRUE	SSD1_S4E0_JTAG_TDO
88	TRUE	SSD1_S4E0_JTAG_TDI
91 90 89 88	TRUE	SSD1_S4E_JTAG_SEL
90 89	TRUE	SSD1_S4E1_JTAG_TDO
91 90	TRUE	SSD1_S4E2_JTAG_TDO
91 89	TRUE	SSD1_S4E3_JTAG_TDO

S4E

PPC603	PVDDCPUAWAKE_SW0	75
PPC604	PVDDCPUAWAKE_SW1	75
PPC605	PVDDCPUAWAKE_SW2	75
PPC606	PVDDCPUAWAKE_SW3	75
PPC607	PVCCPRIMCORE_SW0	75
PPC608	PVCCPRIMCORE_SW1	75
PPC609	P0V8SLPDDR_SW0	75
PPC610	P0V8SLPDDR_SW1	75
PPC611	P1V8SLPS2R_SW0	75
PPC612	P1V1SLPS2R_SW0	75
PPC613	P1V1SLPS2R_SW1	75
PPC614	P0V9SLPDDR_SW0	75
PPC615	P0V9SLPDDR_SW1	75
PPC616	PVDDCPUSRAMAWAKE_SW0	75

EE TESTS SWE

53	ISNS_HS_COMPUTING_P	TPC650
53	ISNS_HS_COMPUTING_N	TPC651
53	ISNS_HS_OTHER5V_P	TPC652
53	ISNS_HS_OTHER5V_N	TPC653
53	ISNS_HS_3V3_X_P	TPC654
53	ISNS_HS_3V3_X_N	TPC655
53	ISNS_HS_3V3_T_P	TPC656
53	ISNS_HS_3V3_T_N	TPC657
81 53	ISNS_LCDBKLT_P	TPC658
81 53	ISNS_LCDBKLT_N	TPC659
54	ISNS_1V0_P	TPC660
54	ISNS_1V0_N	TPC661
74 54	ISNS_CPUDDR_P	TPC662
74 54	ISNS_CPUDDR_N	TPC663
54	ISNS_CPUVDDQ_P	TPC664
54	ISNS_CPUVDDQ_N	TPC665
54	CPUVR_ISNS_P	TPC666
54	CPUVR_ISNS_N	TPC667
54	ISNS_WLAN_N	TPC668
54	ISNS_WLAN_P	TPC669
54	ISNS_WL1V8_P	TPC670
54	ISNS_WL1V8_N	TPC671
82 55	ISNS_LCDPANEL_P	TPC672
82 55	ISNS_LCDPANEL_N	TPC673
56	ISNS_CALPE_P	TPC674
56	ISNS_CALPE_N	TPC675
56	CPUGT_ISNS_R_P	TPC676
56	CPUGT_ISNS_R_N	TPC677
71 56	CPUSA_ISNS_P	TPC678
71 56	CPUSA_ISNS_N	TPC679
78 56	ISNS_CPUVCCIO_POS	TPC680
78 56	ISNS_CPUVCCIO_NEG	TPC681
94	GFXIMVP_ISNS_R_N	TPC682
94	GFXIMVP_ISNS_R_P	TPC683
98 58	VDDCIS0_CS_P	TPC684
98 58	VDDCIS0_CS_N	TPC685
58	ISNS_GPU1V8_P	TPC686
58	ISNS_GPU1V8_N	TPC687
98 58	GPUFB_CS_P	TPC688
98 58	GPUFB_CS_N	TPC689
58	ISNS_GPUFBIC_P	TPC6A0
58	ISNS_GPUFBIC_N	TPC6A1
58	ISNS_GPU_HS_P	TPC6A2
58	ISNS_GPU_HS_N	TPC6A3
59 53	SMC_PBUS_VSENSE	TPC6A4
59 58	PMU_CPU_VSENSE	TPC6A5
59 58	PMU_GPU_CORE_VSENSE	TPC6A6
58 56	EADC1_CPUGT_VSENSE	TPC6A7
72 62 64 52 58 84	GND_CALPE_AVSS	TPC6A8
58 56	EADC1_CPUSA_VSENSE	TPC6A9
58 56	EADC2_GPU_VDDCI_VSENSE	TPC6B0
55 54 58 56	GND_EADC2_COM	TPC6B1
59 53	SMC_DCIN_VSENSE	TPC6B2
68	CHGR_CSI_R_P	TPC6B3
68	CHGR_CSI_R_N	TPC6B4
68 55	CHGR_CSO_R_P	TPC6B5
68 55	CHGR_CSO_R_N	TPC6B6
55	ISNS_PPBUS_MAIN_SSD0_P	TPC6B7
55	ISNS_PPBUS_MAIN_SSD0_N	TPC6B8
55	ISNS_PPBUS_MAIN_SSD1_P	TPC6B9

EE TESTS SWE -2

55	ISNS_PPBUS_MAIN_SSD1_N	TPC6C0
55	ISNS_P3V3_G3W_SSD0_P	TPC6C1
55	ISNS_P3V3_G3W_SSD0_N	TPC6C2
55	ISNS_P3V3_G3W_SSD1_P	TPC6C3
55	ISNS_P3V3_G3W_SSD1_N	TPC6C4
55	ISNS_T139_P	TPC6C7
55	ISNS_T139_N	TPC6C8

WP pins of ROMs

36	BT_SFLASH_WP_L	TPC6D0	PLACE_SIDE=TOP
27	TBT_X_ROM_WP_L	TPC6D1	PLACE_SIDE=TOP
105	TBT_T_ROM_WP_L	TPC6D2	PLACE_SIDE=TOP
102	GPU_ROM_WP_L	TPC6D3	PLACE_SIDE=TOP
46	SPI_SOCROM_WP_L	TPC6D4	PLACE_SIDE=TOP

EE TESTS PCH

12	PCIE_CLK100M_DEBUG_N	TPC620	PLACE_NEAR=U1200.AK6:25MM
12	PCIE_CLK100M_DEBUG_P	TPC621	PLACE_NEAR=U1200.AM6:25MM
36 12	PCH_PCIE_CLK100M_WLAN_N	TPC631	
36 12	PCH_PCIE_CLK100M_WLAN_P	TPC632	
41 12	PCIE_CLK100M_SOC_N	PPC633	PLACE_NEAR=U3900.G12:25MM
41 12	PCIE_CLK100M_SOC_P	PPC634	PLACE_NEAR=U3900.G13:25MM

S4E

TPC690A	SSD0_S4E0_UART_TX	83
TPC691A	SSD1_S4E0_UART_TX	88
TPC692A	SSD0_S4E1_UART_TX	84
TPC693A	SSD1_S4E1_UART_TX	89
TPC694A	SSD0_S4E2_UART_TX	85
TPC695A	SSD0_S4E3_UART_TX	86
TPC696A	SSD1_S4E3_UART_TX	91
TPC697A	SSD0_S4E1_DROOP_L	84
TPC698A	SSD1_S4E2_UART_TX	90
TPC699A	SSD0_CLKREQ2_L	41 47 85
TPC69AA	SSD0_S4E3_DROOP_L	86
TPC69BA	SSD0_S4E2_DROOP_L	85
TPC69CA	SSD0_CLKREQ3_L	41 47 86
TPC69DA	SSD0_S4E0_DROOP_L	83

PAGE TITLE
ICT, MAC-1 ,EE Testpoints

Apple Inc.

DRAWING NUMBER 051-02643 SIZE D
REVISION 4.0.0
BRANCH evt-0
PAGE 126 OF 200
SHEET 121 OF 131

NOTICE OF PROPRIETARY PROPERTY:
THE INFORMATION CONTAINED HEREIN IS THE PROPRIETARY PROPERTY OF APPLE INC.
THE POSESSOR AGREES TO THE FOLLOWING:
I TO MAINTAIN THIS DOCUMENT IN CONFIDENCE
II NOT TO REPRODUCE OR COPY IT
III NOT TO REVEAL OR PUBLISH IT IN WHOLE OR PART
IV ALL RIGHTS RESERVED

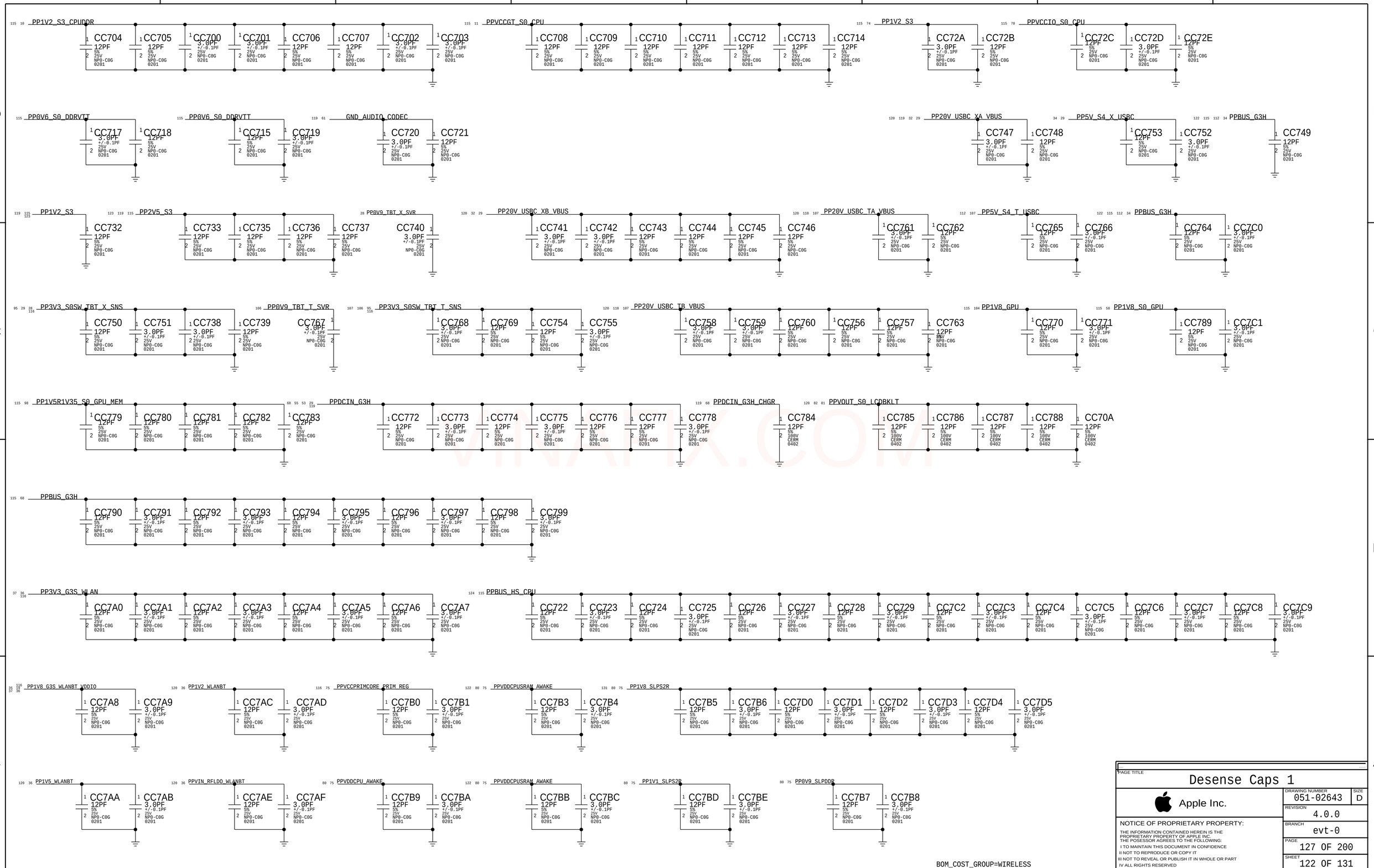

PAGE TITLE

Desense Caps 1

Apple Inc.

DRAWING NUMBER 051-02643 SIZE D

REVISION 4.0.0

BRANCH evt-0

PAGE 127 OF 200

SHEET 122 OF 131

NOTICE OF PROPRIETARY PROPERTY:

THE INFORMATION CONTAINED HEREIN IS THE PROPRIETARY PROPERTY OF APPLE INC.
THE POSESSOR AGREES TO THE FOLLOWING:

I TO MAINTAIN THIS DOCUMENT IN CONFIDENCE

II NOT TO REPRODUCE OR COPY IT

III NOT TO REVEAL OR PUBLISH IT IN WHOLE OR PART

IV ALL RIGHTS RESERVED

PP1V2_S3 115 119 122 123

CC840 12PF 5% 25V NP0-C0G 0201
CC841 12PF 5% 25V NP0-C0G 0201
CC842 12PF 5% 25V NP0-C0G 0201
CC843 12PF 5% 25V NP0-C0G 0201
CC844 12PF 5% 25V NP0-C0G 0201
CC845 12PF 5% 25V NP0-C0G 0201
CC846 12PF 5% 25V NP0-C0G 0201
CC847 12PF 5% 25V NP0-C0G 0201
CC848 12PF 5% 25V NP0-C0G 0201
CC849 12PF 5% 25V NP0-C0G 0201

CC850 12PF 5% 25V NP0-C0G 0201
CC851 12PF 5% 25V NP0-C0G 0201
CC852 12PF 5% 25V NP0-C0G 0201
CC853 12PF 5% 25V NP0-C0G 0201
CC854 12PF 5% 25V NP0-C0G 0201
CC855 12PF 5% 25V NP0-C0G 0201
CC856 12PF 5% 25V NP0-C0G 0201
CC858 12PF 5% 25V NP0-C0G 0201
CC859 12PF 5% 25V NP0-C0G 0201

CC860 12PF 5% 25V NP0-C0G 0201
CC861 12PF 5% 25V NP0-C0G 0201
CC862 12PF 5% 25V NP0-C0G 0201
CC863 12PF 5% 25V NP0-C0G 0201
CC864 12PF 5% 25V NP0-C0G 0201
CC865 12PF 5% 25V NP0-C0G 0201
CC866 12PF 5% 25V NP0-C0G 0201
CC867 12PF 5% 25V NP0-C0G 0201
CC8W0 12PF 5% 25V NP0-C0G 0201
CC869 12PF 5% NP0-C0G 2 0201

CC870 12PF 5% 25V NP0-C0G 0201
CC871 12PF 5% 25V NP0-C0G 0201
CC872 12PF 5% 25V NP0-C0G 0201
CC873 12PF 5% 25V NP0-C0G 0201
CC874 12PF 5% 25V NP0-C0G 0201
CC875 12PF 5% 25V NP0-C0G 0201
CC876 12PF 5% 25V NP0-C0G 0201
CC877 12PF 5% 25V NP0-C0G 0201
CC878 12PF 5% 25V 2 NP0-C0G 0201
CC879 12PF 5% 25V NP0-C0G 2 0201
CC819 3.0PF +/-0.1PF 25V NP0-C0G 0201
CC8W1 12PF 5% 25V 2 NP0-C0G 0201

CC8G0 12PF 5% 25V NP0-C0G 0201
CC8G1 12PF 5% 25V NP0-C0G 0201
CC8G2 12PF 5% 25V NP0-C0G 0201
CC8G3 12PF 5% 25V NP0-C0G 0201
CC8G4 12PF 5% 25V NP0-C0G 0201
CC8G5 12PF 5% 25V NP0-C0G 0201
CC8G6 12PF 5% 25V NP0-C0G 0201
CC8G7 12PF 5% 25V NP0-C0G 0201
CC8G8 12PF 5% 25V 2 NP0-C0G 0201
CC8G9 12PF 5% NP0-C0G 2 0201
CC8ZA 12PF 5% 25V 2 NP0-C0G 0201
CC8W2 12PF 5% 25V 2 NP0-C0G 0201
CC8W3 12PF 5% 25V 2 NP0-C0G 0201

CC8H0 12PF 5% 25V NP0-C0G 0201
CC8H1 12PF 5% 25V NP0-C0G 0201
CC8H2 12PF 5% 25V NP0-C0G 0201
CC8H3 12PF 5% 25V NP0-C0G 0201
CC8H4 12PF 5% 25V NP0-C0G 0201
CC8H6 12PF 5% 25V NP0-C0G 0201
CC8H7 12PF 5% 25V NP0-C0G 0201
CC8H8 12PF 5% 25V 2 NP0-C0G 0201
CC8H9 12PF 5% NP0-C0G 2 0201
CC8W6 12PF 5% 25V 2 NP0-C0G 0201
CC8W5 12PF 5% 25V 2 NP0-C0G 0201
CC8W4 12PF 5% 25V 2 NP0-C0G 0201

CC8I0 12PF 5% 25V 2 NP0-C0G 0201
CC8I1 12PF 5% 25V 2 NP0-C0G 0201
CC8I2 12PF 5% 25V 2 NP0-C0G 0201
CC8I4 12PF 5% 25V 2 NP0-C0G 0201
CC8I5 12PF 5% 25V 2 NP0-C0G 0201
CC8I6 12PF 5% 25V 2 NP0-C0G 0201
CC8I7 12PF 5% 25V 2 NP0-C0G 0201
CC8I8 12PF 5% 25V 2 NP0-C0G 0201
CC8I9 12PF 5% NP0-C0G 2 0201
CC8W9 12PF 5% 25V 2 NP0-C0G 0201
CC8W7 12PF 5% 25V 2 NP0-C0G 0201
CC8W8 12PF 5% 25V 2 NP0-C0G 0201

CC8J0 12PF 5% 25V 2 NP0-C0G 0201
CC8J1 12PF 5% 25V 2 NP0-C0G 0201
CC8J2 12PF 5% 25V 2 NP0-C0G 0201
CC8J3 12PF 5% 25V 2 NP0-C0G 0201
CC8J4 12PF 5% 25V 2 NP0-C0G 0201
CC8E0 12PF 5% 25V 2 NP0-C0G 0201
CC8Y5 12PF 5% 25V 2 NP0-C0G 0201
CC8Y4 12PF 5% 25V 2 NP0-C0G 0201
CC8Y3 12PF 5% 25V 2 NP0-C0G 0201
CC8J9 12PF 5% NP0-C0G 2 0201
CC8Y2 12PF 5% 25V 2 NP0-C0G 0201
CC8X1 12PF 5% 25V NP0-C0G 2 0201
CC8X0 12PF 5% 25V NP0-C0G 2 0201

PP2V5_S3 115 119 122

CC880 12PF 5% 25V NP0-C0G 0201
CC881 12PF 5% 25V NP0-C0G 0201
CC882 12PF 5% 25V NP0-C0G 0201
CC883 12PF 5% 25V NP0-C0G 0201
CC884 12PF 5% 25V NP0-C0G 0201
CC885 12PF 5% 25V NP0-C0G 0201
CC886 12PF 5% 25V NP0-C0G 0201
CC887 12PF 5% 25V NP0-C0G 0201
CC888 12PF 5% 25V NP0-C0G 2 0201
CC889 12PF 5% 25V NP0-C0G 2 0201

CC890 12PF 5% 25V NP0-C0G 0201
CC891 12PF 5% 25V NP0-C0G 0201
CC892 12PF 5% 25V NP0-C0G 0201
CC893 12PF 5% 25V NP0-C0G 0201
CC894 12PF 5% 25V NP0-C0G 0201
CC895 12PF 5% 25V NP0-C0G 0201
CC896 12PF 5% 25V NP0-C0G 0201
CC897 12PF 5% 25V NP0-C0G 0201
CC898 12PF 5% 25V 2 NP0-C0G 0201
CC899 12PF 5% 25V NP0-C0G 2 0201

CC8P0 12PF 5% 25V NP0-C0G 0201
CC8P1 12PF 5% 25V NP0-C0G 0201
CC8P2 12PF 5% 25V NP0-C0G 0201
CC8P3 12PF 5% 25V NP0-C0G 0201
CC8P4 12PF 5% 25V NP0-C0G 0201
CC8P5 12PF 5% 25V NP0-C0G 0201

FOR DESENSE IMPROVEMENT
PLACE ONE AT EACH DDR3L MEMORY MODULE.

PP1V2_S3 115 119 122 123

CC8A0 3.0PF +/-0.1PF 25V NP0-C0G 0201
CC8A1 3.0PF +/-0.1PF 25V NP0-C0G 0201
CC8A2 3.0PF +/-0.1PF 25V NP0-C0G 0201
CC8A3 3.0PF +/-0.1PF 25V NP0-C0G 0201
CC8A4 3.0PF +/-0.1PF 25V NP0-C0G 0201
CC8A5 3.0PF +/-0.1PF 25V NP0-C0G 0201
CC8A6 3.0PF +/-0.1PF 25V NP0-C0G 0201
CC8A7 3.0PF +/-0.1PF 25V NP0-C0G 0201
CC8A8 3.0PF +/-0.1PF 25V NP0-C0G 0201
CC8A9 3.0PF +/-0.1PF 25V NP0-C0G 0201

CC8B0 3.0PF +/-0.1PF 25V NP0-C0G 0201
CC8B1 3.0PF +/-0.1PF 25V NP0-C0G 0201
CC8B2 3.0PF +/-0.1PF 25V NP0-C0G 0201
CC8B3 3.0PF +/-0.1PF 25V NP0-C0G 0201
CC8B5 3.0PF +/-0.1PF 25V NP0-C0G 0201
CC8B6 3.0PF +/-0.1PF 25V NP0-C0G 0201
CC8B7 3.0PF +/-0.1PF 25V NP0-C0G 0201
CC8B8 3.0PF +/-0.1PF 25V NP0-C0G 0201
CC8B9 3.0PF +/-0.1PF 25V NP0-C0G 0201

CC8C0 3.0PF +/-0.1PF 25V NP0-C0G 0201
CC8C1 3.0PF +/-0.1PF 25V NP0-C0G 0201
CC8C2 3.0PF +/-0.1PF 25V NP0-C0G 0201
CC8C3 3.0PF +/-0.1PF 25V NP0-C0G 0201
CC8C4 3.0PF +/-0.1PF 25V NP0-C0G 0201
CC8C5 3.0PF +/-0.1PF 25V NP0-C0G 0201
CC8C6 3.0PF +/-0.1PF 25V NP0-C0G 0201
CC8C7 3.0PF +/-0.1PF 25V NP0-C0G 0201
CC8C8 3.0PF +/-0.1PF 25V NP0-C0G 0201
CC8C9 3.0PF +/-0.1PF 25V NP0-C0G 0201

CC8D0 3.0PF +/-0.1PF 25V NP0-C0G 0201
CC8D1 3.0PF +/-0.1PF 25V NP0-C0G 0201
CC8D2 3.0PF +/-0.1PF 25V NP0-C0G 0201
CC8D3 3.0PF +/-0.1PF 25V NP0-C0G 0201
CC8D4 3.0PF +/-0.1PF 25V NP0-C0G 0201
CC8D5 3.0PF +/-0.1PF 25V NP0-C0G 0201
CC8Z7 3.0PF +/-0.1PF 25V NP0-C0G 0201
CC8Z6 3.0PF +/-0.1PF 25V NP0-C0G 0201
CC8Z5 3.0PF +/-0.1PF 25V NP0-C0G 0201
CC8ZB 3.0PF +/-0.1PF 25V NP0-C0G 0201

CC8K0 3.0PF +/-0.1PF 25V NP0-C0G 0201
CC8K1 3.0PF +/-0.1PF 25V NP0-C0G 0201
CC8K2 3.0PF +/-0.1PF 25V NP0-C0G 0201
CC8K3 3.0PF +/-0.1PF 25V NP0-C0G 0201
CC8K4 3.0PF +/-0.1PF 25V NP0-C0G 0201
CC8K5 3.0PF +/-0.1PF 25V NP0-C0G 0201
CC8K6 3.0PF +/-0.1PF 25V NP0-C0G 0201
CC8K7 3.0PF +/-0.1PF 25V NP0-C0G 0201
CC8K8 3.0PF +/-0.1PF 25V NP0-C0G 0201
CC8K9 3.0PF +/-0.1PF 25V NP0-C0G 0201

CC8L0 3.0PF +/-0.1PF 25V NP0-C0G 0201
CC8L1 3.0PF +/-0.1PF 25V NP0-C0G 0201
CC8L2 3.0PF +/-0.1PF 25V NP0-C0G 0201
CC8L3 3.0PF +/-0.1PF 25V NP0-C0G 0201
CC8L4 3.0PF +/-0.1PF 25V NP0-C0G 0201
CC8L6 3.0PF +/-0.1PF 25V NP0-C0G 0201
CC8L7 3.0PF +/-0.1PF 25V NP0-C0G 0201
CC8L8 3.0PF +/-0.1PF 25V NP0-C0G 0201
CC8L9 3.0PF +/-0.1PF 25V NP0-C0G 0201

CC8M0 3.0PF +/-0.1PF 25V NP0-C0G 0201
CC8M1 3.0PF +/-0.1PF 25V NP0-C0G 0201
CC8M2 3.0PF +/-0.1PF 25V NP0-C0G 0201
CC8M3 3.0PF +/-0.1PF 25V NP0-C0G 0201
CC8M4 3.0PF +/-0.1PF 25V NP0-C0G 0201
CC8M5 3.0PF +/-0.1PF 25V NP0-C0G 0201
CC8M6 3.0PF +/-0.1PF 25V NP0-C0G 0201
CC8M7 3.0PF +/-0.1PF 25V NP0-C0G 0201
CC8M8 3.0PF +/-0.1PF 25V NP0-C0G 0201
CC8M9 3.0PF +/-0.1PF 25V NP0-C0G 0201

CC8N0 3.0PF +/-0.1PF 25V NP0-C0G 0201
CC8N1 3.0PF +/-0.1PF 25V NP0-C0G 0201
CC8N2 3.0PF +/-0.1PF 25V NP0-C0G 0201
CC8N3 3.0PF +/-0.1PF 25V NP0-C0G 0201
CC8Z4 3.0PF +/-0.1PF 25V NP0-C0G 0201
CC8Z3 3.0PF +/-0.1PF 25V NP0-C0G 0201
CC8Z1 3.0PF +/-0.1PF 25V NP0-C0G 0201
CC8Z9 3.0PF +/-0.1PF 25V NP0-C0G 0201
CC8N8 3.0PF +/-0.1PF 25V NP0-C0G 0201
CC8Z2 3.0PF +/-0.1PF 25V NP0-C0G 0201

BOM_COST_GROUP=WIRELESS

PAGE TITLE	Desense Caps 2
Apple Inc.	DRAWING NUMBER 051-02643 SIZE D
	REVISION 4.0.0
	BRANCH evt-0
	PAGE 128 OF 200
	SHEET 123 OF 131

NOTICE OF PROPRIETARY PROPERTY:
THE INFORMATION CONTAINED HEREIN IS THE PROPRIETARY PROPERTY OF APPLE INC.
THE POSESSOR AGREES TO THE FOLLOWING:
I TO MAINTAIN THIS DOCUMENT IN CONFIDENCE
II NOT TO REPRODUCE OR COPY IT
III NOT TO REVEAL OR PUBLISH IT IN WHOLE OR PART
IV ALL RIGHTS RESERVED

Near NAND IC's

PP1V8_SSD0: CC900 12PF, CC901 3.0PF, CC902 12PF, CC903 3.0PF, CC904 12PF, CC905 3.0PF, CC906 12PF, CC907 3.0PF

Near NAND IC's

PP1V8_SSD1: CC918 12PF, CC919 3.0PF, CC91A 12PF, CC91B 3.0PF, CC91C 12PF, CC91D 3.0PF, CC91E 12PF, CC91F 3.0PF

Near NAND VR's

PP1V8_SSD0: CC930 12PF, CC931 3.0PF

PP1V8_SSD1: CC932 12PF, CC933 3.0PF

PP0V9_SSD0: CC908 12PF, CC909 3.0PF, CC90A 12PF, CC90B 3.0PF, CC90C 12PF, CC90D 3.0PF, CC90E 12PF, CC90F 3.0PF

PP0V9_SSD1: CC920 12PF, CC921 3.0PF, CC922 12PF, CC923 3.0PF, CC924 12PF, CC925 3.0PF, CC926 12PF, CC927 3.0PF

PP0V9_SSD0: CC934 12PF, CC935 3.0PF

PP0V9_SSD1: CC936 12PF, CC937 3.0PF

PP2V5_NAND_SSD0: CC910 12PF, CC911 3.0PF, CC912 12PF, CC913 3.0PF, CC914 12PF, CC915 3.0PF, CC916 12PF, CC917 3.0PF

PP2V5_NAND_SSD1: CC928 12PF, CC929 3.0PF, CC92A 12PF, CC92B 3.0PF, CC92C 12PF, CC92D 3.0PF, CC92E 12PF, CC92F 3.0PF

PP2V5_NAND_SSD0: CC938 12PF, CC939 3.0PF

PP2V5_NAND_SSD1: CC93A 12PF, CC93B 3.0PF

Near GMUX

PP3V3_S5: CC93C 12PF, CC93D 3.0PF, CC93E 12PF, CC93F 3.0PF

Near VRAMS

PP1V5R1V35_S0_GPU_MEM: CC940 12PF, CC941 3.0PF, CC942 12PF, CC943 3.0PF, CC944 12PF, CC945 3.0PF, CC946 12PF, CC947 3.0PF, CC948 12PF, CC949 3.0PF, CC94A 12PF, CC94B 3.0PF, CC94C 12PF, CC94D 3.0PF, CC94E 12PF, CC94F 3.0PF

Near GPU

PP1V5R1V35_S0_GPU_IC: CC950 12PF, CC951 3.0PF, CC952 12PF, CC953 3.0PF

Near GPU

PPVCORE_S0_GPU: CC954 12PF, CC955 3.0PF, CC956 12PF, CC957 3.0PF, CC958 12PF, CC959 3.0PF, CC95A 12PF, CC95B 3.0PF, CC95C 12PF, CC95D 3.0PF, CC95E 12PF, CC95F 3.0PF

Near GPU

PP1V8_S0_GPU_LC_IC: CC960 12PF, CC961 3.0PF, CC962 12PF, CC963 3.0PF

Near GPU

PPVDDCI_S0_GPU: CC964 12PF, CC965 3.0PF, CC966 12PF, CC967 3.0PF, CC968 12PF, CC969 3.0PF, CC96A 12PF, CC96B 3.0PF, CC96C 12PF, CC96D 3.0PF, CC96E 12PF, CC96F 3.0PF

Near Power Shape Top Side

PPBUS_HS_CPU: CC970 12PF, CC971 3.0PF, CC972 12PF, CC973 3.0PF, CC974 12PF, CC975 3.0PF, CC976 12PF, CC977 3.0PF, CC978 12PF, CC979 3.0PF, CC97A 12PF, CC97B 3.0PF

PPBUS_HS_GPU: CC97C 12PF, CC97D 3.0PF, CC97E 12PF, CC97F 3.0PF, CC980 12PF, CC981 3.0PF

GFXIMVP_LGATE1: CC987 3.0PF

GFXIMVP_PHASE2: CC988 3.0PF

GFXIMVP_PHASE3: CC98B 3.0PF

PPVCORE_S0_GPU: CC98C 3.0PF

GFXIMVP_PHASE1: CC989 3.0PF

PPVCORE_S0_GFX_PH1: CC98D 3.0PF

PPVCORE_S0_GFX_PH2: CC98E 3.0PF

PPVCORE_S0_GFX_PH3: CC98F 3.0PF

BOM_COST_GROUP=WIRELESS

VINAFIX.COM

PAGE TITLE: Desense Caps 3

Apple Inc.

DRAWING NUMBER: 051-02643 SIZE: D

REVISION: 4.0.0

BRANCH: evt-0

PAGE: 129 OF 200

SHEET: 124 OF 131

NOTICE OF PROPRIETARY PROPERTY:
THE INFORMATION CONTAINED HEREIN IS THE PROPRIETARY PROPERTY OF APPLE INC.
THE POSESSOR AGREES TO THE FOLLOWING:
I TO MAINTAIN THIS DOCUMENT IN CONFIDENCE
II NOT TO REPRODUCE OR COPY IT
III NOT TO REVEAL OR PUBLISH IT IN WHOLE OR PART
IV ALL RIGHTS RESERVED

Memory Bit/Byte Swizzle

DDR4 COMMAND/ADDRESS

KBL-H DDR4 NET	BIT SWIZZLE
MAKE_BASE=TRUE	
MEM_A_DQ<0>	MEM_A_DQ<0>
MEM_A_DQ<1>	MEM_A_DQ<1>
MEM_A_DQ<2>	MEM_A_DQ<2>
MEM_A_DQ<3>	MEM_A_DQ<3>
MEM_A_DQ<4>	MEM_A_DQ<4>
MEM_A_DQ<5>	MEM_A_DQ<5>
MEM_A_DQ<6>	MEM_A_DQ<6>
MEM_A_DQ<7>	MEM_A_DQ<7>
MEM_A_DQ<8>	MEM_A_DQ<8>
MEM_A_DQ<9>	MEM_A_DQ<9>
MEM_A_DQ<10>	MEM_A_DQ<10>
MEM_A_DQ<11>	MEM_A_DQ<11>
MEM_A_DQ<12>	MEM_A_DQ<12>
MEM_A_DQ<13>	MEM_A_DQ<13>
MEM_A_DQ<14>	MEM_A_DQ<14>
MEM_A_DQ<15>	MEM_A_DQ<15>
MEM_A_DQ<16>	MEM_A_DQ<16>
MEM_A_DQ<17>	MEM_A_DQ<17>
MEM_A_DQ<18>	MEM_A_DQ<18>
MEM_A_DQ<19>	MEM_A_DQ<19>
MEM_A_DQ<20>	MEM_A_DQ<20>
MEM_A_DQ<21>	MEM_A_DQ<21>
MEM_A_DQ<22>	MEM_A_DQ<22>
MEM_A_DQ<23>	MEM_A_DQ<23>
MEM_A_DQ<24>	MEM_A_DQ<24>
MEM_A_DQ<25>	MEM_A_DQ<25>
MEM_A_DQ<26>	MEM_A_DQ<26>
MEM_A_DQ<27>	MEM_A_DQ<27>
MEM_A_DQ<28>	MEM_A_DQ<28>
MEM_A_DQ<29>	MEM_A_DQ<29>
MEM_A_DQ<30>	MEM_A_DQ<30>
MEM_A_DQ<31>	MEM_A_DQ<31>
MEM_A_DQ<32>	MEM_A_DQ<32>
MEM_A_DQ<33>	MEM_A_DQ<33>
MEM_A_DQ<34>	MEM_A_DQ<34>
MEM_A_DQ<35>	MEM_A_DQ<35>
MEM_A_DQ<36>	MEM_A_DQ<36>
MEM_A_DQ<37>	MEM_A_DQ<37>
MEM_A_DQ<38>	MEM_A_DQ<38>
MEM_A_DQ<39>	MEM_A_DQ<39>
MEM_A_DQ<40>	MEM_A_DQ<40>
MEM_A_DQ<41>	MEM_A_DQ<41>
MEM_A_DQ<42>	MEM_A_DQ<42>
MEM_A_DQ<43>	MEM_A_DQ<43>
MEM_A_DQ<44>	MEM_A_DQ<44>
MEM_A_DQ<45>	MEM_A_DQ<45>
MEM_A_DQ<46>	MEM_A_DQ<46>
MEM_A_DQ<47>	MEM_A_DQ<47>
MEM_A_DQ<48>	MEM_A_DQ<48>
MEM_A_DQ<49>	MEM_A_DQ<49>
MEM_A_DQ<50>	MEM_A_DQ<50>
MEM_A_DQ<51>	MEM_A_DQ<51>
MEM_A_DQ<52>	MEM_A_DQ<52>
MEM_A_DQ<53>	MEM_A_DQ<53>
MEM_A_DQ<54>	MEM_A_DQ<54>
MEM_A_DQ<55>	MEM_A_DQ<55>
MEM_A_DQ<56>	MEM_A_DQ<56>
MEM_A_DQ<57>	MEM_A_DQ<57>
MEM_A_DQ<58>	MEM_A_DQ<58>
MEM_A_DQ<59>	MEM_A_DQ<59>
MEM_A_DQ<60>	MEM_A_DQ<60>
MEM_A_DQ<61>	MEM_A_DQ<61>
MEM_A_DQ<62>	MEM_A_DQ<62>
MEM_A_DQ<63>	MEM_A_DQ<63>

KBL-H DDR4 NET	BIT SWIZZLE
MAKE_BASE=TRUE	
MEM_B_DQ<0>	MEM_B_DQ<0>
MEM_B_DQ<1>	MEM_B_DQ<1>
MEM_B_DQ<2>	MEM_B_DQ<2>
MEM_B_DQ<3>	MEM_B_DQ<3>
MEM_B_DQ<4>	MEM_B_DQ<4>
MEM_B_DQ<5>	MEM_B_DQ<5>
MEM_B_DQ<6>	MEM_B_DQ<6>
MEM_B_DQ<7>	MEM_B_DQ<7>
MEM_B_DQ<8>	MEM_B_DQ<8>
MEM_B_DQ<9>	MEM_B_DQ<9>
MEM_B_DQ<10>	MEM_B_DQ<10>
MEM_B_DQ<11>	MEM_B_DQ<11>
MEM_B_DQ<12>	MEM_B_DQ<12>
MEM_B_DQ<13>	MEM_B_DQ<13>
MEM_B_DQ<14>	MEM_B_DQ<14>
MEM_B_DQ<15>	MEM_B_DQ<15>
MEM_B_DQ<16>	MEM_B_DQ<16>
MEM_B_DQ<17>	MEM_B_DQ<17>
MEM_B_DQ<18>	MEM_B_DQ<18>
MEM_B_DQ<19>	MEM_B_DQ<19>
MEM_B_DQ<20>	MEM_B_DQ<20>
MEM_B_DQ<21>	MEM_B_DQ<21>
MEM_B_DQ<22>	MEM_B_DQ<22>
MEM_B_DQ<23>	MEM_B_DQ<23>
MEM_B_DQ<24>	MEM_B_DQ<24>
MEM_B_DQ<25>	MEM_B_DQ<25>
MEM_B_DQ<26>	MEM_B_DQ<26>
MEM_B_DQ<27>	MEM_B_DQ<27>
MEM_B_DQ<28>	MEM_B_DQ<28>
MEM_B_DQ<29>	MEM_B_DQ<29>
MEM_B_DQ<30>	MEM_B_DQ<30>
MEM_B_DQ<31>	MEM_B_DQ<31>
MEM_B_DQ<32>	MEM_B_DQ<32>
MEM_B_DQ<33>	MEM_B_DQ<33>
MEM_B_DQ<34>	MEM_B_DQ<34>
MEM_B_DQ<35>	MEM_B_DQ<35>
MEM_B_DQ<36>	MEM_B_DQ<36>
MEM_B_DQ<37>	MEM_B_DQ<37>
MEM_B_DQ<38>	MEM_B_DQ<38>
MEM_B_DQ<39>	MEM_B_DQ<39>
MEM_B_DQ<40>	MEM_B_DQ<40>
MEM_B_DQ<41>	MEM_B_DQ<41>
MEM_B_DQ<42>	MEM_B_DQ<42>
MEM_B_DQ<43>	MEM_B_DQ<43>
MEM_B_DQ<44>	MEM_B_DQ<44>
MEM_B_DQ<45>	MEM_B_DQ<45>
MEM_B_DQ<46>	MEM_B_DQ<46>
MEM_B_DQ<47>	MEM_B_DQ<47>
MEM_B_DQ<48>	MEM_B_DQ<48>
MEM_B_DQ<49>	MEM_B_DQ<49>
MEM_B_DQ<50>	MEM_B_DQ<50>
MEM_B_DQ<51>	MEM_B_DQ<51>
MEM_B_DQ<52>	MEM_B_DQ<52>
MEM_B_DQ<53>	MEM_B_DQ<53>
MEM_B_DQ<54>	MEM_B_DQ<54>
MEM_B_DQ<55>	MEM_B_DQ<55>
MEM_B_DQ<56>	MEM_B_DQ<56>
MEM_B_DQ<57>	MEM_B_DQ<57>
MEM_B_DQ<58>	MEM_B_DQ<58>
MEM_B_DQ<59>	MEM_B_DQ<59>
MEM_B_DQ<60>	MEM_B_DQ<60>
MEM_B_DQ<61>	MEM_B_DQ<61>
MEM_B_DQ<62>	MEM_B_DQ<62>
MEM_B_DQ<63>	MEM_B_DQ<63>

MAKE_BASE		
TRUE	MEM_A_DQS_P<0>	MEM_A_DQS_P<0>
TRUE	MEM_A_DQS_N<0>	MEM_A_DQS_N<0>
TRUE	MEM_A_DQS_P<1>	MEM_A_DQS_P<1>
TRUE	MEM_A_DQS_N<1>	MEM_A_DQS_N<1>
TRUE	MEM_A_DQS_P<2>	MEM_A_DQS_P<2>
TRUE	MEM_A_DQS_N<2>	MEM_A_DQS_N<2>
TRUE	MEM_A_DQS_P<3>	MEM_A_DQS_P<3>
TRUE	MEM_A_DQS_N<3>	MEM_A_DQS_N<3>
TRUE	MEM_A_DQS_P<4>	MEM_A_DQS_P<4>
TRUE	MEM_A_DQS_N<4>	MEM_A_DQS_N<4>
TRUE	MEM_A_DQS_P<5>	MEM_A_DQS_P<5>
TRUE	MEM_A_DQS_N<5>	MEM_A_DQS_N<5>
TRUE	MEM_A_DQS_P<6>	MEM_A_DQS_P<6>
TRUE	MEM_A_DQS_N<6>	MEM_A_DQS_N<6>
TRUE	MEM_A_DQS_P<7>	MEM_A_DQS_P<7>
TRUE	MEM_A_DQS_N<7>	MEM_A_DQS_N<7>

MAKE_BASE		
TRUE	MEM_B_DQS_P<0>	MEM_B_DQS_P<0>
TRUE	MEM_B_DQS_N<0>	MEM_B_DQS_N<0>
TRUE	MEM_B_DQS_P<1>	MEM_B_DQS_P<1>
TRUE	MEM_B_DQS_N<1>	MEM_B_DQS_N<1>
TRUE	MEM_B_DQS_P<2>	MEM_B_DQS_P<2>
TRUE	MEM_B_DQS_N<2>	MEM_B_DQS_N<2>
TRUE	MEM_B_DQS_P<3>	MEM_B_DQS_P<3>
TRUE	MEM_B_DQS_N<3>	MEM_B_DQS_N<3>
TRUE	MEM_B_DQS_P<4>	MEM_B_DQS_P<4>
TRUE	MEM_B_DQS_N<4>	MEM_B_DQS_N<4>
TRUE	MEM_B_DQS_P<5>	MEM_B_DQS_P<5>
TRUE	MEM_B_DQS_N<5>	MEM_B_DQS_N<5>
TRUE	MEM_B_DQS_P<6>	MEM_B_DQS_P<6>
TRUE	MEM_B_DQS_N<6>	MEM_B_DQS_N<6>
TRUE	MEM_B_DQS_P<7>	MEM_B_DQS_P<7>
TRUE	MEM_B_DQS_N<7>	MEM_B_DQS_N<7>

VINA TECH.COM

SYNC_MASTER=j380_mlb SYNC_DATE=02/09/2017

PAGE TITLE
Memory Bite/Byte Swizzle

Apple Inc.

DRAWING NUMBER 051-02643
SIZE D
REVISION 4.0.0
BRANCH evt-0
PAGE 130 OF 200
SHEET 125 OF 131

NOTICE OF PROPRIETARY PROPERTY:
THE INFORMATION CONTAINED HEREIN IS THE PROPRIETARY PROPERTY OF APPLE INC.
THE POSESSOR AGREES TO THE FOLLOWING:
I TO MAINTAIN THIS DOCUMENT IN CONFIDENCE
II NOT TO REPRODUCE OR COPY IT
III NOT TO REVEAL OR PUBLISH IT IN WHOLE OR PART
IV ALL RIGHTS RESERVED

VINAFIX.COM

SoC USB DFU Mux

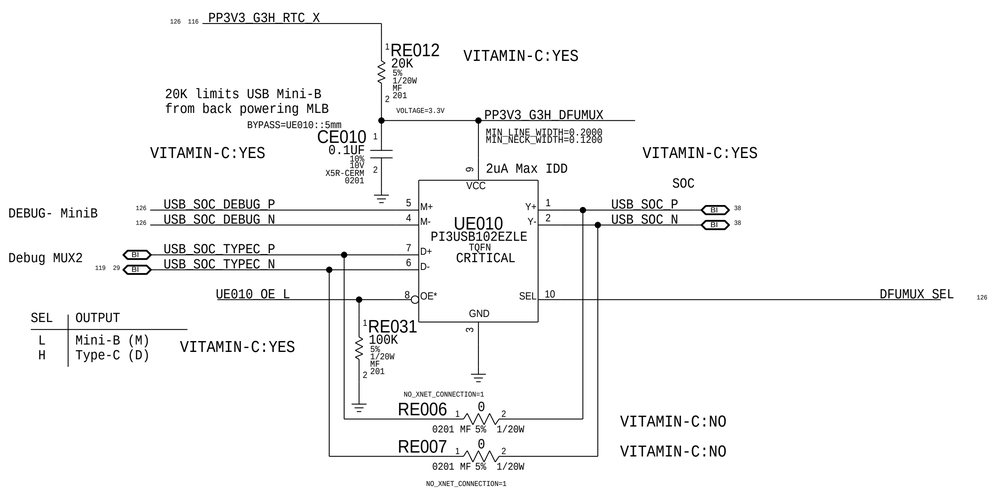

SEL	OUTPUT
L	Mini-B (M)
H	Type-C (D)

DEBUG Connector

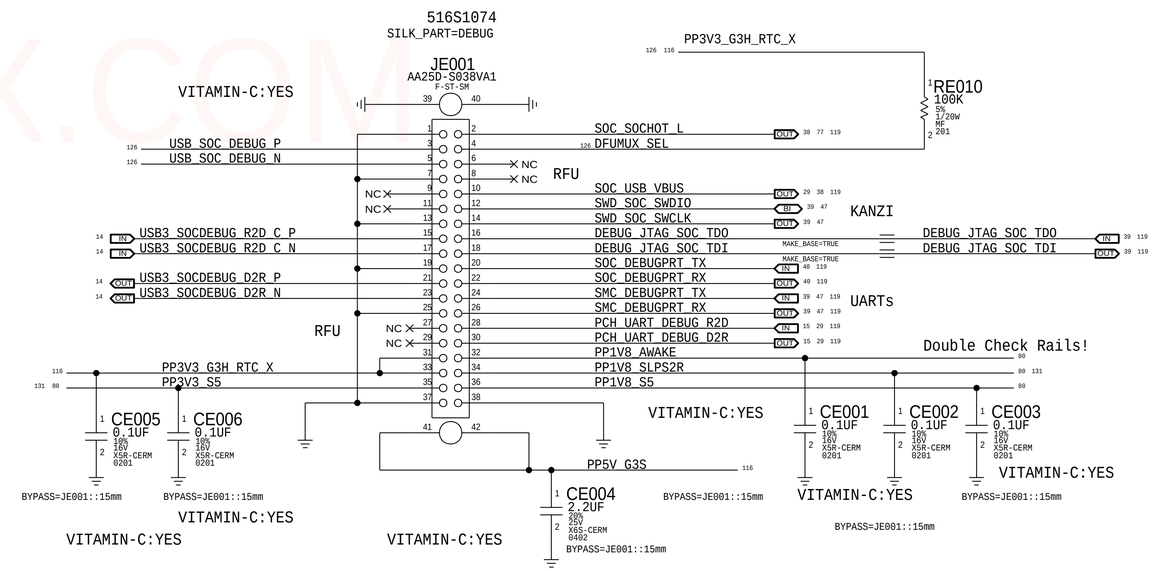

BOM_COST_GROUP=DEBUG

SYNC_MASTER=Debug SYNC_DATE=05/03/2017

PAGE TITLE

Dev Support

Apple Inc.

DRAWING NUMBER 051-02643 SIZE D

REVISION 4.0.0

BRANCH evt-0

PAGE 140 OF 200

SHEET 126 OF 131

NOTICE OF PROPRIETARY PROPERTY:
THE INFORMATION CONTAINED HEREIN IS THE PROPRIETARY PROPERTY OF APPLE INC.
THE POSESSOR AGREES TO THE FOLLOWING:
I TO MAINTAIN THIS DOCUMENT IN CONFIDENCE
II NOT TO REPRODUCE OR COPY IT
III NOT TO REVEAL OR PUBLISH IT IN WHOLE OR PART
IV ALL RIGHTS RESERVED

2.2GHZ CPU, 16GB DRAM, PRX GPU, 256GB S4E

	BOM NUMBER	BOM NAME	BOM OPTIONS
EEEE	639-05681	MLB,2.2GHZ,MC-16,PRX,WD-256,X1190	ALTERNATE,BASE_BOM,DEVEL_BOM,WD_256_PMLC,MC_16G,BAFFIN_PROX,CPU_CFL:2.2
JP4D	639-05682	MLB,2.2GHZ,MC-16,PRX,TS-256,X1190	ALTERNATE,BASE_BOM,DEVEL_BOM,TS_256_PMLC,MC_16G,BAFFIN_PROX,CPU_CFL:2.2
JP4F	639-05683	MLB,2.2GHZ,HY-16,PRX,WD-256,X1190	ALTERNATE,BASE_BOM,DEVEL_BOM,WD_256_PMLC,HY_16G,BAFFIN_PROX,CPU_CFL:2.2
JP4G	639-05684	MLB,2.2GHZ,HY-16,PRX,TS-256,X1190	ALTERNATE,BASE_BOM,DEVEL_BOM,TS_256_PMLC,HY_16G,BAFFIN_PROX,CPU_CFL:2.2
JP4H			

2.2GHZ CPU, 16GB DRAM, PRX GPU, 512GB S4E

	BOM NUMBER	BOM NAME	BOM OPTIONS
EEEE	639-05685	MLB,2.2GHZ,MC-16,PRX,WD-512,X1190	ALTERNATE,BASE_BOM,DEVEL_BOM,WD_512_PMLC,MC_16G,BAFFIN_PROX,CPU_CFL:2.2
JP4J	639-05686	MLB,2.2GHZ,MC-16,PRX,TS-512,X1190	ALTERNATE,BASE_BOM,DEVEL_BOM,TS_512_PMLC,MC_16G,BAFFIN_PROX,CPU_CFL:2.2
JP4L	639-05687	MLB,2.2GHZ,HY-16,PRX,WD-512,X1190	ALTERNATE,BASE_BOM,DEVEL_BOM,WD_512_PMLC,HY_16G,BAFFIN_PROX,CPU_CFL:2.2
JP4M	639-05688	MLB,2.2GHZ,HY-16,PRX,TS-512,X1190	ALTERNATE,BASE_BOM,DEVEL_BOM,TS_512_PMLC,HY_16G,BAFFIN_PROX,CPU_CFL:2.2
JP4P			

2.2GHZ CPU, 16GB DRAM, PRX GPU, 1TB S4E

	BOM NUMBER	BOM NAME	BOM OPTIONS
EEEE	639-05689	MLB,2.2GHZ,MC-16,PRX,WD-1TB,X1190	ALTERNATE,BASE_BOM,BOM_6L,DEVEL_BOM,WD_1TB_PMLC,MC_16G,BAFFIN_PROX,CPU_CFL:2.2
JP4R	639-05690	MLB,2.2GHZ,MC-16,PRX,TS-1TB,X1190	ALTERNATE,BASE_BOM,BOM_6L,DEVEL_BOM,TS_1TB_PMLC,MC_16G,BAFFIN_PROX,CPU_CFL:2.2
JP4Q	639-05691	MLB,2.2GHZ,HY-16,PRX,WD-1TB,X1190	ALTERNATE,BASE_BOM,BOM_6L,DEVEL_BOM,WD_1TB_PMLC,HY_16G,BAFFIN_PROX,CPU_CFL:2.2
JP4W	639-05692	MLB,2.2GHZ,HY-16,PRX,TS-1TB,X1190	ALTERNATE,BASE_BOM,BOM_6L,DEVEL_BOM,TS_1TB_PMLC,HY_16G,BAFFIN_PROX,CPU_CFL:2.2
JP4X			

2.2GHZ CPU, 16GB DRAM, PRX GPU, 2TB S4E

	BOM NUMBER	BOM NAME	BOM OPTIONS
EEEE	639-05693	MLB,2.2GHZ,MC-16,PRX,WD-2TB,X1190	ALTERNATE,BASE_BOM,BOM_8L,DEVEL_BOM,WD_2TB_PMLC,MC_16G,BAFFIN_PROX,CPU_CFL:2.2
JP4Y	639-05694	MLB,2.2GHZ,MC-16,PRX,TS-2TB,X1190	ALTERNATE,BASE_BOM,BOM_8L,DEVEL_BOM,TS_2TB_PMLC,MC_16G,BAFFIN_PROX,CPU_CFL:2.2
JP50	639-05695	MLB,2.2GHZ,MC-16,PRX,SM-2TB,X1190	ALTERNATE,BASE_BOM,BOM_8L,DEVEL_BOM,SM_2TB_3DV4,MC_16G,BAFFIN_PROX,CPU_CFL:2.2
JP51	639-05696	MLB,2.2GHZ,HY-16,PRX,WD-2TB,X1190	ALTERNATE,BASE_BOM,BOM_8L,DEVEL_BOM,WD_2TB_PMLC,HY_16G,BAFFIN_PROX,CPU_CFL:2.2
JP52	639-05697	MLB,2.2GHZ,HY-16,PRX,TS-2TB,X1190	ALTERNATE,BASE_BOM,BOM_8L,DEVEL_BOM,TS_2TB_PMLC,HY_16G,BAFFIN_PROX,CPU_CFL:2.2
JP53	639-05698	MLB,2.2GHZ,HY-16,PRX,SM-2TB,X1190	ALTERNATE,BASE_BOM,BOM_8L,DEVEL_BOM,SM_2TB_3DV4,HY_16G,BAFFIN_PROX,CPU_CFL:2.2
JP54			

2.2GHZ CPU, 16GB DRAM, PRX GPU, 4TB S4E

	BOM NUMBER	BOM NAME	BOM OPTIONS
EEEE	639-05699	MLB,2.2GHZ,MC-16,PRX,SM-4TB,X1190	ALTERNATE,BASE_BOM,BOM_8L,DEVEL_BOM,SM_4TB_3DV4,MC_16G,BAFFIN_PROX,CPU_CFL:2.2
JP55	639-05700	MLB,2.2GHZ,HY-16,PRX,SM-4TB,X1190	ALTERNATE,BASE_BOM,BOM_8L,DEVEL_BOM,SM_4TB_3DV4,HY_16G,BAFFIN_PROX,CPU_CFL:2.2
JP56			

2.2GHZ CPU, 32GB DRAM, PRX GPU, 256GB S4E

	BOM NUMBER	BOM NAME	BOM OPTIONS
EEEE	639-05721	MLB,2.2GHZ,MC-32,PRX,WD-256,X1190	ALTERNATE,BASE_BOM,DEVEL_BOM,WD_256_PMLC,MC_32G,BAFFIN_PROX,CPU_CFL:2.2
JP5Y	639-05722	MLB,2.2GHZ,MC-32,PRX,TS-256,X1190	ALTERNATE,BASE_BOM,DEVEL_BOM,TS_256_PMLC,MC_32G,BAFFIN_PROX,CPU_CFL:2.2
JP60	639-05723	MLB,2.2GHZ,HY-32,PRX,WD-256,X1190	ALTERNATE,BASE_BOM,DEVEL_BOM,WD_256_PMLC,HY_32G,BAFFIN_PROX,CPU_CFL:2.2
JP61	639-05724	MLB,2.2GHZ,HY-32,PRX,TS-256,X1190	ALTERNATE,BASE_BOM,DEVEL_BOM,TS_256_PMLC,HY_32G,BAFFIN_PROX,CPU_CFL:2.2
JP62			

2.2GHZ CPU, 32GB DRAM, PRX GPU, 512GB S4E

	BOM NUMBER	BOM NAME	BOM OPTIONS
EEEE	639-05725	MLB,2.2GHZ,MC-32,PRX,WD-512,X1190	ALTERNATE,BASE_BOM,DEVEL_BOM,WD_512_PMLC,MC_32G,BAFFIN_PROX,CPU_CFL:2.2
JP63	639-05726	MLB,2.2GHZ,MC-32,PRX,TS-512,X1190	ALTERNATE,BASE_BOM,DEVEL_BOM,TS_512_PMLC,MC_32G,BAFFIN_PROX,CPU_CFL:2.2
JP64	639-05727	MLB,2.2GHZ,HY-32,PRX,WD-512,X1190	ALTERNATE,BASE_BOM,DEVEL_BOM,WD_512_PMLC,HY_32G,BAFFIN_PROX,CPU_CFL:2.2
JP65	639-05728	MLB,2.2GHZ,HY-32,PRX,TS-512,X1190	ALTERNATE,BASE_BOM,DEVEL_BOM,TS_512_PMLC,HY_32G,BAFFIN_PROX,CPU_CFL:2.2
JP66			

2.2GHZ CPU, 32GB DRAM, PRX GPU, 1TB S4E

	BOM NUMBER	BOM NAME	BOM OPTIONS
EEEE	639-05729	MLB,2.2GHZ,MC-32,PRX,WD-1TB,X1190	ALTERNATE,BASE_BOM,BOM_6L,DEVEL_BOM,WD_1TB_PMLC,MC_32G,BAFFIN_PROX,CPU_CFL:2.2
JP67	639-05730	MLB,2.2GHZ,MC-32,PRX,TS-1TB,X1190	ALTERNATE,BASE_BOM,BOM_6L,DEVEL_BOM,TS_1TB_PMLC,MC_32G,BAFFIN_PROX,CPU_CFL:2.2
JP68	639-05731	MLB,2.2GHZ,HY-32,PRX,WD-1TB,X1190	ALTERNATE,BASE_BOM,BOM_6L,DEVEL_BOM,WD_1TB_PMLC,HY_32G,BAFFIN_PROX,CPU_CFL:2.2
JP69	639-05732	MLB,2.2GHZ,HY-32,PRX,TS-1TB,X1190	ALTERNATE,BASE_BOM,BOM_6L,DEVEL_BOM,TS_1TB_PMLC,HY_32G,BAFFIN_PROX,CPU_CFL:2.2
JP6C			

2.2GHZ CPU, 32GB DRAM, PRX GPU, 2TB S4E

	BOM NUMBER	BOM NAME	BOM OPTIONS
EEEE	639-05733	MLB,2.2GHZ,MC-32,PRX,WD-2TB,X1190	ALTERNATE,BASE_BOM,BOM_8L,DEVEL_BOM,WD_2TB_PMLC,MC_32G,BAFFIN_PROX,CPU_CFL:2.2
JP6D	639-05734	MLB,2.2GHZ,MC-32,PRX,TS-2TB,X1190	ALTERNATE,BASE_BOM,BOM_8L,DEVEL_BOM,TS_2TB_PMLC,MC_32G,BAFFIN_PROX,CPU_CFL:2.2
JP6F	639-05735	MLB,2.2GHZ,MC-32,PRX,SM-2TB,X1190	ALTERNATE,BASE_BOM,BOM_8L,DEVEL_BOM,SM_2TB_3DV4,MC_32G,BAFFIN_PROX,CPU_CFL:2.2
JP6G	639-05736	MLB,2.2GHZ,HY-32,PRX,WD-2TB,X1190	ALTERNATE,BASE_BOM,BOM_8L,DEVEL_BOM,WD_2TB_PMLC,HY_32G,BAFFIN_PROX,CPU_CFL:2.2
JP6H	639-05737	MLB,2.2GHZ,HY-32,PRX,TS-2TB,X1190	ALTERNATE,BASE_BOM,BOM_8L,DEVEL_BOM,TS_2TB_PMLC,HY_32G,BAFFIN_PROX,CPU_CFL:2.2
JP6J	639-05738	MLB,2.2GHZ,HY-32,PRX,SM-2TB,X1190	ALTERNATE,BASE_BOM,BOM_8L,DEVEL_BOM,SM_2TB_3DV4,HY_32G,BAFFIN_PROX,CPU_CFL:2.2
JP6K			

2.2GHZ CPU, 32GB DRAM, PRX GPU, 4TB S4E

	BOM NUMBER	BOM NAME	BOM OPTIONS
EEEE	639-05739	MLB,2.2GHZ,MC-32,PRX,SM-4TB,X1190	ALTERNATE,BASE_BOM,BOM_8L,DEVEL_BOM,SM_4TB_3DV4,MC_32G,BAFFIN_PROX,CPU_CFL:2.2
JP6L	639-05740	MLB,2.2GHZ,HY-32,PRX,SM-4TB,X1190	ALTERNATE,BASE_BOM,BOM_8L,DEVEL_BOM,SM_4TB_3DV4,HY_32G,BAFFIN_PROX,CPU_CFL:2.2
JP6M			

2.2GHZ CPU, 32GB DRAM, ULX GPU, 4TB S4E

	BOM NUMBER	BOM NAME	BOM OPTIONS
EEEE	639-05759	MLB,2.2GHZ,MC-32,ULX,SM-4TB,X1190	ALTERNATE,BASE_BOM,BOM_8L,DEVEL_BOM,SM_4TB_3DV4,MC_32G,BAFFIN_ULX,CPU_CFL:2.2
JP79	639-05760	MLB,2.2GHZ,HY-32,ULX,SM-4TB,X1190	ALTERNATE,BASE_BOM,BOM_8L,DEVEL_BOM,SM_4TB_3DV4,HY_32G,BAFFIN_ULX,CPU_CFL:2.2
JP7C			

2.2GHZ CPU, 16GB DRAM, ULX GPU, 256GB S4E

	BOM NUMBER	BOM NAME	BOM OPTIONS
EEEE	639-05701	MLB,2.2GHZ,MC-16,ULX,WD-256,X1190	ALTERNATE,BASE_BOM,DEVEL_BOM,WD_256_PMLC,MC_16G,BAFFIN_ULX,CPU_CFL:2.2
JP57	639-05702	MLB,2.2GHZ,MC-16,ULX,TS-256,X1190	ALTERNATE,BASE_BOM,DEVEL_BOM,TS_256_PMLC,MC_16G,BAFFIN_ULX,CPU_CFL:2.2
JP58	639-05703	MLB,2.2GHZ,HY-16,ULX,WD-256,X1190	ALTERNATE,BASE_BOM,DEVEL_BOM,WD_256_PMLC,HY_16G,BAFFIN_ULX,CPU_CFL:2.2
JP59	639-05704	MLB,2.2GHZ,HY-16,ULX,TS-256,X1190	ALTERNATE,BASE_BOM,DEVEL_BOM,TS_256_PMLC,HY_16G,BAFFIN_ULX,CPU_CFL:2.2
JP5C			

2.2GHZ CPU, 16GB DRAM, ULX GPU, 512GB S4E

	BOM NUMBER	BOM NAME	BOM OPTIONS
EEEE	639-05705	MLB,2.2GHZ,MC-16,ULX,WD-512,X1190	ALTERNATE,BASE_BOM,DEVEL_BOM,WD_512_PMLC,MC_16G,BAFFIN_ULX,CPU_CFL:2.2
JP5D	639-05706	MLB,2.2GHZ,MC-16,ULX,TS-512,X1190	ALTERNATE,BASE_BOM,DEVEL_BOM,TS_512_PMLC,MC_16G,BAFFIN_ULX,CPU_CFL:2.2
JP5F	639-05707	MLB,2.2GHZ,HY-16,ULX,WD-512,X1190	ALTERNATE,BASE_BOM,DEVEL_BOM,WD_512_PMLC,HY_16G,BAFFIN_ULX,CPU_CFL:2.2
JP5G	639-05708	MLB,2.2GHZ,HY-16,ULX,TS-512,X1190	ALTERNATE,BASE_BOM,DEVEL_BOM,TS_512_PMLC,HY_16G,BAFFIN_ULX,CPU_CFL:2.2
JP5H			

2.2GHZ CPU, 16GB DRAM, ULX GPU, 1TB S4E

	BOM NUMBER	BOM NAME	BOM OPTIONS
EEEE	639-05709	MLB,2.2GHZ,MC-16,ULX,WD-1TB,X1190	ALTERNATE,BASE_BOM,BOM_6L,DEVEL_BOM,WD_1TB_PMLC,MC_16G,BAFFIN_ULX,CPU_CFL:2.2
JP5J	639-05710	MLB,2.2GHZ,MC-16,ULX,TS-1TB,X1190	ALTERNATE,BASE_BOM,BOM_6L,DEVEL_BOM,TS_1TB_PMLC,MC_16G,BAFFIN_ULX,CPU_CFL:2.2
JP5K	639-05711	MLB,2.2GHZ,HY-16,ULX,WD-1TB,X1190	ALTERNATE,BASE_BOM,BOM_6L,DEVEL_BOM,WD_1TB_PMLC,HY_16G,BAFFIN_ULX,CPU_CFL:2.2
JP5L	639-05712	MLB,2.2GHZ,HY-16,ULX,TS-1TB,X1190	ALTERNATE,BASE_BOM,BOM_6L,DEVEL_BOM,TS_1TB_PMLC,HY_16G,BAFFIN_ULX,CPU_CFL:2.2
JP5M			

2.2GHZ CPU, 16GB DRAM, ULX GPU, 2TB S4E

	BOM NUMBER	BOM NAME	BOM OPTIONS
EEEE	639-05713	MLB,2.2GHZ,MC-16,ULX,WD-2TB,X1190	ALTERNATE,BASE_BOM,BOM_8L,DEVEL_BOM,WD_2TB_PMLC,MC_16G,BAFFIN_ULX,CPU_CFL:2.2
JP5N	639-05714	MLB,2.2GHZ,MC-16,ULX,TS-2TB,X1190	ALTERNATE,BASE_BOM,BOM_8L,DEVEL_BOM,TS_2TB_PMLC,MC_16G,BAFFIN_ULX,CPU_CFL:2.2
JP5P	639-05715	MLB,2.2GHZ,MC-16,ULX,SM-2TB,X1190	ALTERNATE,BASE_BOM,BOM_8L,DEVEL_BOM,SM_2TB_3DV4,MC_16G,BAFFIN_ULX,CPU_CFL:2.2
JP5Q	639-05716	MLB,2.2GHZ,HY-16,ULX,WD-2TB,X1190	ALTERNATE,BASE_BOM,BOM_8L,DEVEL_BOM,WD_2TB_PMLC,HY_16G,BAFFIN_ULX,CPU_CFL:2.2
JP5R	639-05717	MLB,2.2GHZ,HY-16,ULX,TS-2TB,X1190	ALTERNATE,BASE_BOM,BOM_8L,DEVEL_BOM,TS_2TB_PMLC,HY_16G,BAFFIN_ULX,CPU_CFL:2.2
JP5T	639-05718	MLB,2.2GHZ,HY-16,ULX,SM-2TB,X1190	ALTERNATE,BASE_BOM,BOM_8L,DEVEL_BOM,SM_2TB_3DV4,HY_16G,BAFFIN_ULX,CPU_CFL:2.2
JP5V			

2.2GHZ CPU, 16GB DRAM, ULX GPU, 4TB S4E

	BOM NUMBER	BOM NAME	BOM OPTIONS
EEEE	639-05719	MLB,2.2GHZ,MC-16,ULX,SM-4TB,X1190	ALTERNATE,BASE_BOM,BOM_8L,DEVEL_BOM,SM_4TB_3DV4,MC_16G,BAFFIN_ULX,CPU_CFL:2.2
JP5W	639-05720	MLB,2.2GHZ,HY-16,ULX,SM-4TB,X1190	ALTERNATE,BASE_BOM,BOM_8L,DEVEL_BOM,SM_4TB_3DV4,HY_16G,BAFFIN_ULX,CPU_CFL:2.2
JP5X			

2.2GHZ CPU, 32GB DRAM, ULX GPU, 256GB S4E

	BOM NUMBER	BOM NAME	BOM OPTIONS
EEEE	639-05741	MLB,2.2GHZ,MC-32,ULX,WD-256,X1190	ALTERNATE,BASE_BOM,DEVEL_BOM,WD_256_PMLC,MC_32G,BAFFIN_ULX,CPU_CFL:2.2
JP6N	639-05742	MLB,2.2GHZ,MC-32,ULX,TS-256,X1190	ALTERNATE,BASE_BOM,DEVEL_BOM,TS_256_PMLC,MC_32G,BAFFIN_ULX,CPU_CFL:2.2
JP6P	639-05743	MLB,2.2GHZ,HY-32,ULX,WD-256,X1190	ALTERNATE,BASE_BOM,DEVEL_BOM,WD_256_PMLC,HY_32G,BAFFIN_ULX,CPU_CFL:2.2
JP6Q	639-05744	MLB,2.2GHZ,HY-32,ULX,TS-256,X1190	ALTERNATE,BASE_BOM,DEVEL_BOM,TS_256_PMLC,HY_32G,BAFFIN_ULX,CPU_CFL:2.2
JP6R			

2.2GHZ CPU, 32GB DRAM, ULX GPU, 512GB S4E

	BOM NUMBER	BOM NAME	BOM OPTIONS
EEEE	639-05745	MLB,2.2GHZ,MC-32,ULX,WD-512,X1190	ALTERNATE,BASE_BOM,DEVEL_BOM,WD_512_PMLC,MC_32G,BAFFIN_ULX,CPU_CFL:2.2
JP6T	639-05746	MLB,2.2GHZ,MC-32,ULX,TS-512,X1190	ALTERNATE,BASE_BOM,DEVEL_BOM,TS_512_PMLC,MC_32G,BAFFIN_ULX,CPU_CFL:2.2
JP6V	639-05747	MLB,2.2GHZ,HY-32,ULX,WD-512,X1190	ALTERNATE,BASE_BOM,DEVEL_BOM,WD_512_PMLC,HY_32G,BAFFIN_ULX,CPU_CFL:2.2
JP6W	639-05748	MLB,2.2GHZ,HY-32,ULX,TS-512,X1190	ALTERNATE,BASE_BOM,DEVEL_BOM,TS_512_PMLC,HY_32G,BAFFIN_ULX,CPU_CFL:2.2
JP6X			

2.2GHZ CPU, 32GB DRAM, ULX GPU, 1TB S4E

	BOM NUMBER	BOM NAME	BOM OPTIONS
EEEE	639-05749	MLB,2.2GHZ,MC-32,ULX,WD-1TB,X1190	ALTERNATE,BASE_BOM,BOM_6L,DEVEL_BOM,WD_1TB_PMLC,MC_32G,BAFFIN_ULX,CPU_CFL:2.2
JP6Y	639-05750	MLB,2.2GHZ,MC-32,ULX,TS-1TB,X1190	ALTERNATE,BASE_BOM,BOM_6L,DEVEL_BOM,TS_1TB_PMLC,MC_32G,BAFFIN_ULX,CPU_CFL:2.2
JP70	639-05751	MLB,2.2GHZ,HY-32,ULX,WD-1TB,X1190	ALTERNATE,BASE_BOM,BOM_6L,DEVEL_BOM,WD_1TB_PMLC,HY_32G,BAFFIN_ULX,CPU_CFL:2.2
JP71	639-05752	MLB,2.2GHZ,HY-32,ULX,TS-1TB,X1190	ALTERNATE,BASE_BOM,BOM_6L,DEVEL_BOM,TS_1TB_PMLC,HY_32G,BAFFIN_ULX,CPU_CFL:2.2
JP72			

2.2GHZ CPU, 32GB DRAM, ULX GPU, 2TB S4E

	BOM NUMBER	BOM NAME	BOM OPTIONS
EEEE	639-05753	MLB,2.2GHZ,MC-32,ULX,WD-2TB,X1190	ALTERNATE,BASE_BOM,BOM_8L,DEVEL_BOM,WD_2TB_PMLC,MC_32G,BAFFIN_ULX,CPU_CFL:2.2
JP73	639-05754	MLB,2.2GHZ,MC-32,ULX,TS-2TB,X1190	ALTERNATE,BASE_BOM,BOM_8L,DEVEL_BOM,TS_2TB_PMLC,MC_32G,BAFFIN_ULX,CPU_CFL:2.2
JP74	639-05755	MLB,2.2GHZ,MC-32,ULX,SM-2TB,X1190	ALTERNATE,BASE_BOM,BOM_8L,DEVEL_BOM,SM_2TB_3DV4,MC_32G,BAFFIN_ULX,CPU_CFL:2.2
JP75	639-05756	MLB,2.2GHZ,HY-32,ULX,WD-2TB,X1190	ALTERNATE,BASE_BOM,BOM_8L,DEVEL_BOM,WD_2TB_PMLC,HY_32G,BAFFIN_ULX,CPU_CFL:2.2
JP76	639-05757	MLB,2.2GHZ,HY-32,ULX,TS-2TB,X1190	ALTERNATE,BASE_BOM,BOM_8L,DEVEL_BOM,TS_2TB_PMLC,HY_32G,BAFFIN_ULX,CPU_CFL:2.2
JP77	639-05758	MLB,2.2GHZ,HY-32,ULX,SM-2TB,X1190	ALTERNATE,BASE_BOM,BOM_8L,DEVEL_BOM,SM_2TB_3DV4,HY_32G,BAFFIN_ULX,CPU_CFL:2.2
JP78			

PAGE TITLE

BOM-639 2.2GHz

Apple Inc.

DRAWING NUMBER	051-02643
SIZE	D
REVISION	4.0.0
BRANCH	evt-0
PAGE	141 OF 200
SHEET	127 OF 131

NOTICE OF PROPRIETARY PROPERTY:
THE INFORMATION CONTAINED HEREIN IS THE PROPRIETARY PROPERTY OF APPLE INC.
THE POSESSOR AGREES TO THE FOLLOWING:
I TO MAINTAIN THIS DOCUMENT IN CONFIDENCE
II NOT TO REPRODUCE OR COPY IT
III NOT TO REVEAL OR PUBLISH IT IN WHOLE OR PART
IV ALL RIGHTS RESERVED

2.6GHZ CPU, 16GB DRAM, ULX GPU, 512GB S4E

	BOM NUMBER	BOM NAME	BOM OPTIONS
EEEE			
JP7D	639-05761	MLB,2.6GHZ,MC-16,ULX,WD-512,X1190	ALTERNATE,BASE_BOM,DEVEL_BOM,WD_512_PMLC,MC_16G,BAFFIN_ULX,CPU_CFL:2.6
JP7F	639-05762	MLB,2.6GHZ,MC-16,ULX,TS-512,X1190	ALTERNATE,BASE_BOM,DEVEL_BOM,TS_512_PMLC,MC_16G,BAFFIN_ULX,CPU_CFL:2.6
JP7G	639-05763	MLB,2.6GHZ,HY-16,ULX,WD-512,X1190	ALTERNATE,BASE_BOM,DEVEL_BOM,WD_512_PMLC,HY_16G,BAFFIN_ULX,CPU_CFL:2.6
JP7H	639-05764	MLB,2.6GHZ,HY-16,ULX,TS-512,X1190	ALTERNATE,BASE_BOM,DEVEL_BOM,TS_512_PMLC,HY_16G,BAFFIN_ULX,CPU_CFL:2.6

2.6GHZ CPU, 16GB DRAM, ULX GPU, 1TB S4E

	BOM NUMBER	BOM NAME	BOM OPTIONS
EEEE			
JP7J	639-05765	MLB,2.6GHZ,MC-16,ULX,WD-1TB,X1190	ALTERNATE,BASE_BOM,BOM_6L,DEVEL_BOM,WD_1TB_PMLC,MC_16G,BAFFIN_ULX,CPU_CFL:2.6
JP7K	639-05766	MLB,2.6GHZ,MC-16,ULX,TS-1TB,X1190	ALTERNATE,BASE_BOM,BOM_6L,DEVEL_BOM,TS_1TB_PMLC,MC_16G,BAFFIN_ULX,CPU_CFL:2.6
JP7L	639-05767	MLB,2.6GHZ,HY-16,ULX,WD-1TB,X1190	ALTERNATE,BASE_BOM,BOM_6L,DEVEL_BOM,WD_1TB_PMLC,HY_16G,BAFFIN_ULX,CPU_CFL:2.6
JP7M	639-05768	MLB,2.6GHZ,HY-16,ULX,TS-1TB,X1190	ALTERNATE,BASE_BOM,BOM_6L,DEVEL_BOM,TS_1TB_PMLC,HY_16G,BAFFIN_ULX,CPU_CFL:2.6

2.6GHZ CPU, 16GB DRAM, ULX GPU, 2TB S4E

	BOM NUMBER	BOM NAME	BOM OPTIONS
EEEE			
JP7N	639-05769	MLB,2.6GHZ,MC-16,ULX,WD-2TB,X1190	ALTERNATE,BASE_BOM,BOM_8L,DEVEL_BOM,WD_2TB_PMLC,MC_16G,BAFFIN_ULX,CPU_CFL:2.6
JP7P	639-05770	MLB,2.6GHZ,MC-16,ULX,TS-2TB,X1190	ALTERNATE,BASE_BOM,BOM_8L,DEVEL_BOM,TS_2TB_PMLC,MC_16G,BAFFIN_ULX,CPU_CFL:2.6
JP7Q	639-05771	MLB,2.6GHZ,MC-16,ULX,SM-2TB,X1190	ALTERNATE,BASE_BOM,BOM_8L,DEVEL_BOM,SM_2TB_3DV4,MC_16G,BAFFIN_ULX,CPU_CFL:2.6
JP7R	639-05772	MLB,2.6GHZ,HY-16,ULX,WD-2TB,X1190	ALTERNATE,BASE_BOM,BOM_8L,DEVEL_BOM,WD_2TB_PMLC,HY_16G,BAFFIN_ULX,CPU_CFL:2.6
JP7T	639-05773	MLB,2.6GHZ,HY-16,ULX,TS-2TB,X1190	ALTERNATE,BASE_BOM,BOM_8L,DEVEL_BOM,TS_2TB_PMLC,HY_16G,BAFFIN_ULX,CPU_CFL:2.6
JP7V	639-05774	MLB,2.6GHZ,HY-16,ULX,SM-2TB,X1190	ALTERNATE,BASE_BOM,BOM_8L,DEVEL_BOM,SM_2TB_3DV4,HY_16G,BAFFIN_ULX,CPU_CFL:2.6

2.6GHZ CPU, 16GB DRAM, ULX GPU, 4TB S4E

	BOM NUMBER	BOM NAME	BOM OPTIONS
EEEE			
JP7W	639-05775	MLB,2.6GHZ,MC-16,ULX,SM-4TB,X1190	ALTERNATE,BASE_BOM,BOM_8L,DEVEL_BOM,SM_4TB_3DV4,MC_16G,BAFFIN_ULX,CPU_CFL:2.6
JP7X	639-05776	MLB,2.6GHZ,HY-16,ULX,SM-4TB,X1190	ALTERNATE,BASE_BOM,BOM_8L,DEVEL_BOM,SM_4TB_3DV4,HY_16G,BAFFIN_ULX,CPU_CFL:2.6

2.6GHZ CPU, 32GB DRAM, ULX GPU, 512GB S4E

	BOM NUMBER	BOM NAME	BOM OPTIONS
EEEE			
JP7Y	639-05777	MLB,2.6GHZ,MC-32,ULX,WD-512,X1190	ALTERNATE,BASE_BOM,DEVEL_BOM,WD_512_PMLC,MC_32G,BAFFIN_ULX,CPU_CFL:2.6
JP80	639-05778	MLB,2.6GHZ,MC-32,ULX,TS-512,X1190	ALTERNATE,BASE_BOM,DEVEL_BOM,TS_512_PMLC,MC_32G,BAFFIN_ULX,CPU_CFL:2.6
JP81	639-05779	MLB,2.6GHZ,HY-32,ULX,WD-512,X1190	ALTERNATE,BASE_BOM,DEVEL_BOM,WD_512_PMLC,HY_32G,BAFFIN_ULX,CPU_CFL:2.6
JP82	639-05780	MLB,2.6GHZ,HY-32,ULX,TS-512,X1190	ALTERNATE,BASE_BOM,DEVEL_BOM,TS_512_PMLC,HY_32G,BAFFIN_ULX,CPU_CFL:2.6

2.6GHZ CPU, 32GB DRAM, ULX GPU, 1TB S4E

	BOM NUMBER	BOM NAME	BOM OPTIONS
EEEE			
JP83	639-05781	MLB,2.6GHZ,MC-32,ULX,WD-1TB,X1190	ALTERNATE,BASE_BOM,BOM_6L,DEVEL_BOM,WD_1TB_PMLC,MC_32G,BAFFIN_ULX,CPU_CFL:2.6
JP84	639-05782	MLB,2.6GHZ,MC-32,ULX,TS-1TB,X1190	ALTERNATE,BASE_BOM,BOM_6L,DEVEL_BOM,TS_1TB_PMLC,MC_32G,BAFFIN_ULX,CPU_CFL:2.6
JP85	639-05783	MLB,2.6GHZ,HY-32,ULX,WD-1TB,X1190	ALTERNATE,BASE_BOM,BOM_6L,DEVEL_BOM,WD_1TB_PMLC,HY_32G,BAFFIN_ULX,CPU_CFL:2.6
JP86	639-05784	MLB,2.6GHZ,HY-32,ULX,TS-1TB,X1190	ALTERNATE,BASE_BOM,BOM_6L,DEVEL_BOM,TS_1TB_PMLC,HY_32G,BAFFIN_ULX,CPU_CFL:2.6

2.6GHZ CPU, 32GB DRAM, ULX GPU, 2TB S4E

	BOM NUMBER	BOM NAME	BOM OPTIONS
EEEE			
JP87	639-05785	MLB,2.6GHZ,MC-32,ULX,WD-2TB,X1190	ALTERNATE,BASE_BOM,BOM_8L,DEVEL_BOM,WD_2TB_PMLC,MC_32G,BAFFIN_ULX,CPU_CFL:2.6
JP88	639-05786	MLB,2.6GHZ,MC-32,ULX,TS-2TB,X1190	ALTERNATE,BASE_BOM,BOM_8L,DEVEL_BOM,TS_2TB_PMLC,MC_32G,BAFFIN_ULX,CPU_CFL:2.6
JP89	639-05787	MLB,2.6GHZ,MC-32,ULX,SM-2TB,X1190	ALTERNATE,BASE_BOM,BOM_8L,DEVEL_BOM,SM_2TB_3DV4,MC_32G,BAFFIN_ULX,CPU_CFL:2.6
JP8C	639-05788	MLB,2.6GHZ,HY-32,ULX,WD-2TB,X1190	ALTERNATE,BASE_BOM,BOM_8L,DEVEL_BOM,WD_2TB_PMLC,HY_32G,BAFFIN_ULX,CPU_CFL:2.6
JP8D	639-05789	MLB,2.6GHZ,HY-32,ULX,TS-2TB,X1190	ALTERNATE,BASE_BOM,BOM_8L,DEVEL_BOM,TS_2TB_PMLC,HY_32G,BAFFIN_ULX,CPU_CFL:2.6
JP8F	639-05790	MLB,2.6GHZ,HY-32,ULX,SM-2TB,X1190	ALTERNATE,BASE_BOM,BOM_8L,DEVEL_BOM,SM_2TB_3DV4,HY_32G,BAFFIN_ULX,CPU_CFL:2.6

2.6GHZ CPU, 32GB DRAM, ULX GPU, 4TB S4E

	BOM NUMBER	BOM NAME	BOM OPTIONS
EEEE			
JP8G	639-05791	MLB,2.6GHZ,MC-32,ULX,SM-4TB,X1190	ALTERNATE,BASE_BOM,BOM_8L,DEVEL_BOM,SM_4TB_3DV4,MC_32G,BAFFIN_ULX,CPU_CFL:2.6
JP8H	639-05792	MLB,2.6GHZ,HY-32,ULX,SM-4TB,X1190	ALTERNATE,BASE_BOM,BOM_8L,DEVEL_BOM,SM_4TB_3DV4,HY_32G,BAFFIN_ULX,CPU_CFL:2.6

2.2GHZ CPU, 16GB DRAM, PRX GPU, 2TB S4E TLC

BOM NUMBER	BOM NAME	BOM OPTIONS
939-05880	MLB,2.2GHZ,MC-16,PRX,TLC-WD-2TB,X1190	ALTERNATE,BASE_BOM,BOM_8L,DEVEL_BOM,WD_2TB_TLC,MC_16G,BAFFIN_PROX,CPU_CFL:2.2
939-05879	MLB,2.2GHZ,MC-16,PRX,TLC-TS-2TB,X1190	ALTERNATE,BASE_BOM,BOM_8L,DEVEL_BOM,TS_2TB_TLC,MC_16G,BAFFIN_PROX,CPU_CFL:2.2

DC-DC BOMs

BOM NUMBER	BOM NAME	BOM OPTIONS
939-04900	MLB,CPU-SK-S,NO_GPU,X1190	ALTERNATE,BASE_BOM,DEVEL_BOM,BOM_8L,CPU_SKL:SOCKET
939-04901	MLB,NO_CPU,GPU-SK-S,X1190	ALTERNATE,BASE_BOM,DEVEL_BOM,BOM_8L,STARDUST:VDDC
939-04904	MLB,NO_CPU,GPU-SK-M,X1190	ALTERNATE,BASE_BOM,DEVEL_BOM,BOM_8L,STARDUST:VDDCI_MVDD
939-04902	MLB,NO_CPU,NO_GPU,X1190	ALTERNATE,BASE_BOM,DEVEL_BOM,BOM_8L

VINAFIX.COM

SYNC_MASTER=j380_m1b SYNC_DATE=02/09/2017

PAGE TITLE
BOM-639 2.6GHz

Apple Inc.

DRAWING NUMBER 051-02643
SIZE D
REVISION 4.0.0
BRANCH evt-0
PAGE 143 OF 200
SHEET 128 OF 131

NOTICE OF PROPRIETARY PROPERTY:
THE INFORMATION CONTAINED HEREIN IS THE PROPRIETARY PROPERTY OF APPLE INC.
THE POSESSOR AGREES TO THE FOLLOWING:
I TO MAINTAIN THIS DOCUMENT IN CONFIDENCE
II NOT TO REPRODUCE OR COPY IT
III NOT TO REVEAL OR PUBLISH IT IN WHOLE OR PART
IV ALL RIGHTS RESERVED

2.9GHZ CPU, 16GB DRAM, PRX GPU, 256GB S4E

EEEE
JP8J
JP8K
JP8L
JP8M

BOM NUMBER	BOM NAME	BOM OPTIONS
639-05793	MLB,2.9GHZ,MC-16,PRX,WD-256,X1190	ALTERNATE,BASE_BOM,DEVEL_BOM,WD_256_PMLC,MC_16G,BAFFIN_PROX,CPU_CFL:2.9
639-05794	MLB,2.9GHZ,MC-16,PRX,TS-256,X1190	ALTERNATE,BASE_BOM,DEVEL_BOM,TS_256_PMLC,MC_16G,BAFFIN_PROX,CPU_CFL:2.9
639-05795	MLB,2.9GHZ,HY-16,PRX,WD-256,X1190	ALTERNATE,BASE_BOM,DEVEL_BOM,WD_256_PMLC,HY_16G,BAFFIN_PROX,CPU_CFL:2.9
639-05796	MLB,2.9GHZ,HY-16,PRX,TS-256,X1190	ALTERNATE,BASE_BOM,DEVEL_BOM,TS_256_PMLC,HY_16G,BAFFIN_PROX,CPU_CFL:2.9

2.9GHZ CPU, 16GB DRAM, PRX GPU, 512GB S4E

EEEE
JP8N
JP8P
JP8Q
JP8R

BOM NUMBER	BOM NAME	BOM OPTIONS
639-05797	MLB,2.9GHZ,MC-16,PRX,WD-512,X1190	ALTERNATE,BASE_BOM,DEVEL_BOM,WD_512_PMLC,MC_16G,BAFFIN_PROX,CPU_CFL:2.9
639-05798	MLB,2.9GHZ,MC-16,PRX,TS-512,X1190	ALTERNATE,BASE_BOM,DEVEL_BOM,TS_512_PMLC,MC_16G,BAFFIN_PROX,CPU_CFL:2.9
639-05799	MLB,2.9GHZ,HY-16,PRX,WD-512,X1190	ALTERNATE,BASE_BOM,DEVEL_BOM,WD_512_PMLC,HY_16G,BAFFIN_PROX,CPU_CFL:2.9
639-05800	MLB,2.9GHZ,HY-16,PRX,TS-512,X1190	ALTERNATE,BASE_BOM,DEVEL_BOM,TS_512_PMLC,HY_16G,BAFFIN_PROX,CPU_CFL:2.9

2.9GHZ CPU, 16GB DRAM, PRX GPU, 1TB S4E

EEEE
JP8T
JP8V
JP8X
JP8Y

BOM NUMBER	BOM NAME	BOM OPTIONS
639-05801	MLB,2.9GHZ,MC-16,PRX,WD-1TB,X1190	ALTERNATE,BASE_BOM,BOM_6L,DEVEL_BOM,WD_1TB_PMLC,MC_16G,BAFFIN_PROX,CPU_CFL:2.9
639-05802	MLB,2.9GHZ,MC-16,PRX,TS-1TB,X1190	ALTERNATE,BASE_BOM,BOM_6L,DEVEL_BOM,TS_1TB_PMLC,MC_16G,BAFFIN_PROX,CPU_CFL:2.9
639-05803	MLB,2.9GHZ,HY-16,PRX,WD-1TB,X1190	ALTERNATE,BASE_BOM,BOM_6L,DEVEL_BOM,WD_1TB_PMLC,HY_16G,BAFFIN_PROX,CPU_CFL:2.9
639-05804	MLB,2.9GHZ,HY-16,PRX,TS-1TB,X1190	ALTERNATE,BASE_BOM,BOM_6L,DEVEL_BOM,TS_1TB_PMLC,HY_16G,BAFFIN_PROX,CPU_CFL:2.9

2.9GHZ CPU, 16GB DRAM, PRX GPU, 2TB S4E

EEEE
JP90
JP91
JP92
JP93
JP94
JP95

BOM NUMBER	BOM NAME	BOM OPTIONS
639-05805	MLB,2.9GHZ,MC-16,PRX,WD-2TB,X1190	ALTERNATE,BASE_BOM,BOM_8L,DEVEL_BOM,WD_2TB_PMLC,MC_16G,BAFFIN_PROX,CPU_CFL:2.9
639-05806	MLB,2.9GHZ,MC-16,PRX,TS-2TB,X1190	ALTERNATE,BASE_BOM,BOM_8L,DEVEL_BOM,TS_2TB_PMLC,MC_16G,BAFFIN_PROX,CPU_CFL:2.9
639-05807	MLB,2.9GHZ,MC-16,PRX,SM-2TB,X1190	ALTERNATE,BASE_BOM,BOM_8L,DEVEL_BOM,SM_2TB_3DV4,MC_16G,BAFFIN_PROX,CPU_CFL:2.9
639-05808	MLB,2.9GHZ,HY-16,PRX,WD-2TB,X1190	ALTERNATE,BASE_BOM,BOM_8L,DEVEL_BOM,WD_2TB_PMLC,HY_16G,BAFFIN_PROX,CPU_CFL:2.9
639-05809	MLB,2.9GHZ,HY-16,PRX,TS-2TB,X1190	ALTERNATE,BASE_BOM,BOM_8L,DEVEL_BOM,TS_2TB_PMLC,HY_16G,BAFFIN_PROX,CPU_CFL:2.9
639-05810	MLB,2.9GHZ,HY-16,PRX,SM-2TB,X1190	ALTERNATE,BASE_BOM,BOM_8L,DEVEL_BOM,SM_2TB_3DV4,HY_16G,BAFFIN_PROX,CPU_CFL:2.9

2.9GHZ CPU, 16GB DRAM, PRX GPU, 4TB S4E

EEEE
JP96
JP97

BOM NUMBER	BOM NAME	BOM OPTIONS
639-05811	MLB,2.9GHZ,MC-16,PRX,SM-4TB,X1190	ALTERNATE,BASE_BOM,BOM_8L,DEVEL_BOM,SM_4TB_3DV4,MC_16G,BAFFIN_PROX,CPU_CFL:2.9
639-05812	MLB,2.9GHZ,HY-16,PRX,SM-4TB,X1190	ALTERNATE,BASE_BOM,BOM_8L,DEVEL_BOM,SM_4TB_3DV4,HY_16G,BAFFIN_PROX,CPU_CFL:2.9

2.9GHZ CPU, 32GB DRAM, PRX GPU, 256GB S4E

EEEE
JP9Y
JPC0
JPC1
JPC2

BOM NUMBER	BOM NAME	BOM OPTIONS
639-05833	MLB,2.9GHZ,MC-32,PRX,WD-256,X1190	ALTERNATE,BASE_BOM,DEVEL_BOM,WD_256_PMLC,MC_32G,BAFFIN_PROX,CPU_CFL:2.9
639-05834	MLB,2.9GHZ,MC-32,PRX,TS-256,X1190	ALTERNATE,BASE_BOM,DEVEL_BOM,TS_256_PMLC,MC_32G,BAFFIN_PROX,CPU_CFL:2.9
639-05835	MLB,2.9GHZ,HY-32,PRX,WD-256,X1190	ALTERNATE,BASE_BOM,DEVEL_BOM,WD_256_PMLC,HY_32G,BAFFIN_PROX,CPU_CFL:2.9
639-05836	MLB,2.9GHZ,HY-32,PRX,TS-256,X1190	ALTERNATE,BASE_BOM,DEVEL_BOM,TS_256_PMLC,HY_32G,BAFFIN_PROX,CPU_CFL:2.9

2.9GHZ CPU, 32GB DRAM, PRX GPU, 512GB S4E

EEEE
JPC3
JPC4
JPC5
JPC6

BOM NUMBER	BOM NAME	BOM OPTIONS
639-05837	MLB,2.9GHZ,MC-32,PRX,WD-512,X1190	ALTERNATE,BASE_BOM,DEVEL_BOM,WD_512_PMLC,MC_32G,BAFFIN_PROX,CPU_CFL:2.9
639-05838	MLB,2.9GHZ,MC-32,PRX,TS-512,X1190	ALTERNATE,BASE_BOM,DEVEL_BOM,TS_512_PMLC,MC_32G,BAFFIN_PROX,CPU_CFL:2.9
639-05839	MLB,2.9GHZ,HY-32,PRX,WD-512,X1190	ALTERNATE,BASE_BOM,DEVEL_BOM,WD_512_PMLC,HY_32G,BAFFIN_PROX,CPU_CFL:2.9
639-05840	MLB,2.9GHZ,HY-32,PRX,TS-512,X1190	ALTERNATE,BASE_BOM,DEVEL_BOM,TS_512_PMLC,HY_32G,BAFFIN_PROX,CPU_CFL:2.9

2.9GHZ CPU, 32GB DRAM, PRX GPU, 1TB S4E

EEEE
JPC7
JPC8
JPC9
JPCD

BOM NUMBER	BOM NAME	BOM OPTIONS
639-05841	MLB,2.9GHZ,MC-32,PRX,WD-1TB,X1190	ALTERNATE,BASE_BOM,BOM_6L,DEVEL_BOM,WD_1TB_PMLC,MC_32G,BAFFIN_PROX,CPU_CFL:2.9
639-05842	MLB,2.9GHZ,MC-32,PRX,TS-1TB,X1190	ALTERNATE,BASE_BOM,BOM_6L,DEVEL_BOM,TS_1TB_PMLC,MC_32G,BAFFIN_PROX,CPU_CFL:2.9
639-05843	MLB,2.9GHZ,HY-32,PRX,WD-1TB,X1190	ALTERNATE,BASE_BOM,BOM_6L,DEVEL_BOM,WD_1TB_PMLC,HY_32G,BAFFIN_PROX,CPU_CFL:2.9
639-05844	MLB,2.9GHZ,HY-32,PRX,TS-1TB,X1190	ALTERNATE,BASE_BOM,BOM_6L,DEVEL_BOM,TS_1TB_PMLC,HY_32G,BAFFIN_PROX,CPU_CFL:2.9

2.9GHZ CPU, 32GB DRAM, PRX GPU, 2TB S4E

EEEE
JPCF
JPCG
JPCH
JPCJ
JPCL
JPCM

BOM NUMBER	BOM NAME	BOM OPTIONS
639-05845	MLB,2.9GHZ,MC-32,PRX,WD-2TB,X1190	ALTERNATE,BASE_BOM,BOM_8L,DEVEL_BOM,WD_2TB_PMLC,MC_32G,BAFFIN_PROX,CPU_CFL:2.9
639-05846	MLB,2.9GHZ,MC-32,PRX,TS-2TB,X1190	ALTERNATE,BASE_BOM,BOM_8L,DEVEL_BOM,TS_2TB_PMLC,MC_32G,BAFFIN_PROX,CPU_CFL:2.9
639-05847	MLB,2.9GHZ,MC-32,PRX,SM-2TB,X1190	ALTERNATE,BASE_BOM,BOM_8L,DEVEL_BOM,SM_2TB_3DV4,MC_32G,BAFFIN_PROX,CPU_CFL:2.9
639-05848	MLB,2.9GHZ,HY-32,PRX,WD-2TB,X1190	ALTERNATE,BASE_BOM,BOM_8L,DEVEL_BOM,WD_2TB_PMLC,HY_32G,BAFFIN_PROX,CPU_CFL:2.9
639-05849	MLB,2.9GHZ,HY-32,PRX,TS-2TB,X1190	ALTERNATE,BASE_BOM,BOM_8L,DEVEL_BOM,TS_2TB_PMLC,HY_32G,BAFFIN_PROX,CPU_CFL:2.9
639-05850	MLB,2.9GHZ,HY-32,PRX,SM-2TB,X1190	ALTERNATE,BASE_BOM,BOM_8L,DEVEL_BOM,SM_2TB_3DV4,HY_32G,BAFFIN_PROX,CPU_CFL:2.9

2.9GHZ CPU, 32GB DRAM, PRX GPU, 4TB S4E

EEEE
JPCN
JPCQ

BOM NUMBER	BOM NAME	BOM OPTIONS
639-05851	MLB,2.9GHZ,MC-32,PRX,SM-4TB,X1190	ALTERNATE,BASE_BOM,BOM_8L,DEVEL_BOM,SM_4TB_3DV4,MC_32G,BAFFIN_PROX,CPU_CFL:2.9
639-05852	MLB,2.9GHZ,HY-32,PRX,SM-4TB,X1190	ALTERNATE,BASE_BOM,BOM_8L,DEVEL_BOM,SM_4TB_3DV4,HY_32G,BAFFIN_PROX,CPU_CFL:2.9

2.9GHZ CPU, 32GB DRAM, ULX GPU, 4TB S4E

EEEE
JPDF
JPDG

BOM NUMBER	BOM NAME	BOM OPTIONS
639-05871	MLB,2.9GHZ,MC-32,ULX,SM-4TB,X1190	ALTERNATE,BASE_BOM,BOM_8L,DEVEL_BOM,SM_4TB_3DV4,MC_32G,BAFFIN_ULX,CPU_CFL:2.9
639-05872	MLB,2.9GHZ,HY-32,ULX,SM-4TB,X1190	ALTERNATE,BASE_BOM,BOM_8L,DEVEL_BOM,SM_4TB_3DV4,HY_32G,BAFFIN_ULX,CPU_CFL:2.9

2.9GHZ CPU, 16GB DRAM, ULX GPU, 256GB S4E

EEEE
JP97
JP98
JP99
JP9C

BOM NUMBER	BOM NAME	BOM OPTIONS
639-05813	MLB,2.9GHZ,MC-16,ULX,WD-256,X1190	ALTERNATE,BASE_BOM,DEVEL_BOM,WD_256_PMLC,MC_16G,BAFFIN_ULX,CPU_CFL:2.9
639-05814	MLB,2.9GHZ,MC-16,ULX,TS-256,X1190	ALTERNATE,BASE_BOM,DEVEL_BOM,TS_256_PMLC,MC_16G,BAFFIN_ULX,CPU_CFL:2.9
639-05815	MLB,2.9GHZ,HY-16,ULX,WD-256,X1190	ALTERNATE,BASE_BOM,DEVEL_BOM,WD_256_PMLC,HY_16G,BAFFIN_ULX,CPU_CFL:2.9
639-05816	MLB,2.9GHZ,HY-16,ULX,TS-256,X1190	ALTERNATE,BASE_BOM,DEVEL_BOM,TS_256_PMLC,HY_16G,BAFFIN_ULX,CPU_CFL:2.9

2.9GHZ CPU, 16GB DRAM, ULX GPU, 512GB S4E

EEEE
JP9D
JP9F
JP9G
JP9H

BOM NUMBER	BOM NAME	BOM OPTIONS
639-05817	MLB,2.9GHZ,MC-16,ULX,WD-512,X1190	ALTERNATE,BASE_BOM,DEVEL_BOM,WD_512_PMLC,MC_16G,BAFFIN_ULX,CPU_CFL:2.9
639-05818	MLB,2.9GHZ,MC-16,ULX,TS-512,X1190	ALTERNATE,BASE_BOM,DEVEL_BOM,TS_512_PMLC,MC_16G,BAFFIN_ULX,CPU_CFL:2.9
639-05819	MLB,2.9GHZ,HY-16,ULX,WD-512,X1190	ALTERNATE,BASE_BOM,DEVEL_BOM,WD_512_PMLC,HY_16G,BAFFIN_ULX,CPU_CFL:2.9
639-05820	MLB,2.9GHZ,HY-16,ULX,TS-512,X1190	ALTERNATE,BASE_BOM,DEVEL_BOM,TS_512_PMLC,HY_16G,BAFFIN_ULX,CPU_CFL:2.9

2.9GHZ CPU, 16GB DRAM, ULX GPU, 1TB S4E

EEEE
JP9J
JP9K
JP9L
JP9M

BOM NUMBER	BOM NAME	BOM OPTIONS
639-05821	MLB,2.9GHZ,MC-16,ULX,WD-1TB,X1190	ALTERNATE,BASE_BOM,BOM_6L,DEVEL_BOM,WD_1TB_PMLC,MC_16G,BAFFIN_ULX,CPU_CFL:2.9
639-05822	MLB,2.9GHZ,MC-16,ULX,TS-1TB,X1190	ALTERNATE,BASE_BOM,BOM_6L,DEVEL_BOM,TS_1TB_PMLC,MC_16G,BAFFIN_ULX,CPU_CFL:2.9
639-05823	MLB,2.9GHZ,HY-16,ULX,WD-1TB,X1190	ALTERNATE,BASE_BOM,BOM_6L,DEVEL_BOM,WD_1TB_PMLC,HY_16G,BAFFIN_ULX,CPU_CFL:2.9
639-05824	MLB,2.9GHZ,HY-16,ULX,TS-1TB,X1190	ALTERNATE,BASE_BOM,BOM_6L,DEVEL_BOM,TS_1TB_PMLC,HY_16G,BAFFIN_ULX,CPU_CFL:2.9

2.9GHZ CPU, 16GB DRAM, ULX GPU, 2TB S4E

EEEE
JP9N
JP9P
JP9Q
JP9R
JP9T
JP9V

BOM NUMBER	BOM NAME	BOM OPTIONS
639-05825	MLB,2.9GHZ,MC-16,ULX,WD-2TB,X1190	ALTERNATE,BASE_BOM,BOM_8L,DEVEL_BOM,WD_2TB_PMLC,MC_16G,BAFFIN_ULX,CPU_CFL:2.9
639-05826	MLB,2.9GHZ,MC-16,ULX,TS-2TB,X1190	ALTERNATE,BASE_BOM,BOM_8L,DEVEL_BOM,TS_2TB_PMLC,MC_16G,BAFFIN_ULX,CPU_CFL:2.9
639-05827	MLB,2.9GHZ,MC-16,ULX,SM-2TB,X1190	ALTERNATE,BASE_BOM,BOM_8L,DEVEL_BOM,SM_2TB_3DV4,MC_16G,BAFFIN_ULX,CPU_CFL:2.9
639-05828	MLB,2.9GHZ,HY-16,ULX,WD-2TB,X1190	ALTERNATE,BASE_BOM,BOM_8L,DEVEL_BOM,WD_2TB_PMLC,HY_16G,BAFFIN_ULX,CPU_CFL:2.9
639-05829	MLB,2.9GHZ,HY-16,ULX,TS-2TB,X1190	ALTERNATE,BASE_BOM,BOM_8L,DEVEL_BOM,TS_2TB_PMLC,HY_16G,BAFFIN_ULX,CPU_CFL:2.9
639-05830	MLB,2.9GHZ,HY-16,ULX,SM-2TB,X1190	ALTERNATE,BASE_BOM,BOM_8L,DEVEL_BOM,SM_2TB_3DV4,HY_16G,BAFFIN_ULX,CPU_CFL:2.9

2.9GHZ CPU, 16GB DRAM, ULX GPU, 4TB S4E

EEEE
JP9W
JP9X

BOM NUMBER	BOM NAME	BOM OPTIONS
639-05831	MLB,2.9GHZ,MC-16,ULX,SM-4TB,X1190	ALTERNATE,BASE_BOM,BOM_8L,DEVEL_BOM,SM_4TB_3DV4,MC_16G,BAFFIN_ULX,CPU_CFL:2.9
639-05832	MLB,2.9GHZ,HY-16,ULX,SM-4TB,X1190	ALTERNATE,BASE_BOM,BOM_8L,DEVEL_BOM,SM_4TB_3DV4,HY_16G,BAFFIN_ULX,CPU_CFL:2.9

2.9GHZ CPU, 32GB DRAM, ULX GPU, 256GB S4E

EEEE
JPCR
JPCT
JPCV
JPCW

BOM NUMBER	BOM NAME	BOM OPTIONS
639-05853	MLB,2.9GHZ,MC-32,ULX,WD-256,X1190	ALTERNATE,BASE_BOM,DEVEL_BOM,WD_256_PMLC,MC_32G,BAFFIN_ULX,CPU_CFL:2.9
639-05854	MLB,2.9GHZ,MC-32,ULX,TS-256,X1190	ALTERNATE,BASE_BOM,DEVEL_BOM,TS_256_PMLC,MC_32G,BAFFIN_ULX,CPU_CFL:2.9
639-05855	MLB,2.9GHZ,HY-32,ULX,WD-256,X1190	ALTERNATE,BASE_BOM,DEVEL_BOM,WD_256_PMLC,HY_32G,BAFFIN_ULX,CPU_CFL:2.9
639-05856	MLB,2.9GHZ,HY-32,ULX,TS-256,X1190	ALTERNATE,BASE_BOM,DEVEL_BOM,TS_256_PMLC,HY_32G,BAFFIN_ULX,CPU_CFL:2.9

2.9GHZ CPU, 32GB DRAM, ULX GPU, 512GB S4E

EEEE
JPCX
JPCY
JPD0
JPD1

BOM NUMBER	BOM NAME	BOM OPTIONS
639-05857	MLB,2.9GHZ,MC-32,ULX,WD-512,X1190	ALTERNATE,BASE_BOM,DEVEL_BOM,WD_512_PMLC,MC_32G,BAFFIN_ULX,CPU_CFL:2.9
639-05858	MLB,2.9GHZ,MC-32,ULX,TS-512,X1190	ALTERNATE,BASE_BOM,DEVEL_BOM,TS_512_PMLC,MC_32G,BAFFIN_ULX,CPU_CFL:2.9
639-05859	MLB,2.9GHZ,HY-32,ULX,WD-512,X1190	ALTERNATE,BASE_BOM,DEVEL_BOM,WD_512_PMLC,HY_32G,BAFFIN_ULX,CPU_CFL:2.9
639-05860	MLB,2.9GHZ,HY-32,ULX,TS-512,X1190	ALTERNATE,BASE_BOM,DEVEL_BOM,TS_512_PMLC,HY_32G,BAFFIN_ULX,CPU_CFL:2.9

2.9GHZ CPU, 32GB DRAM, ULX GPU, 1TB S4E

EEEE
JPD2
JPD3
JPD4
JPD5

BOM NUMBER	BOM NAME	BOM OPTIONS
639-05861	MLB,2.9GHZ,MC-32,ULX,WD-1TB,X1190	ALTERNATE,BASE_BOM,BOM_6L,DEVEL_BOM,WD_1TB_PMLC,MC_32G,BAFFIN_ULX,CPU_CFL:2.9
639-05862	MLB,2.9GHZ,MC-32,ULX,TS-1TB,X1190	ALTERNATE,BASE_BOM,BOM_6L,DEVEL_BOM,TS_1TB_PMLC,MC_32G,BAFFIN_ULX,CPU_CFL:2.9
639-05863	MLB,2.9GHZ,HY-32,ULX,WD-1TB,X1190	ALTERNATE,BASE_BOM,BOM_6L,DEVEL_BOM,WD_1TB_PMLC,HY_32G,BAFFIN_ULX,CPU_CFL:2.9
639-05864	MLB,2.9GHZ,HY-32,ULX,TS-1TB,X1190	ALTERNATE,BASE_BOM,BOM_6L,DEVEL_BOM,TS_1TB_PMLC,HY_32G,BAFFIN_ULX,CPU_CFL:2.9

2.9GHZ CPU, 32GB DRAM, ULX GPU, 2TB S4E

EEEE
JPD6
JPD7
JPD8
JPD9
JPDC
JPDD

BOM NUMBER	BOM NAME	BOM OPTIONS
639-05865	MLB,2.9GHZ,MC-32,ULX,WD-2TB,X1190	ALTERNATE,BASE_BOM,BOM_8L,DEVEL_BOM,WD_2TB_PMLC,MC_32G,BAFFIN_ULX,CPU_CFL:2.9
639-05866	MLB,2.9GHZ,MC-32,ULX,TS-2TB,X1190	ALTERNATE,BASE_BOM,BOM_8L,DEVEL_BOM,TS_2TB_PMLC,MC_32G,BAFFIN_ULX,CPU_CFL:2.9
639-05867	MLB,2.9GHZ,MC-32,ULX,SM-2TB,X1190	ALTERNATE,BASE_BOM,BOM_8L,DEVEL_BOM,SM_2TB_3DV4,MC_32G,BAFFIN_ULX,CPU_CFL:2.9
639-05868	MLB,2.9GHZ,HY-32,ULX,WD-2TB,X1190	ALTERNATE,BASE_BOM,BOM_8L,DEVEL_BOM,WD_2TB_PMLC,HY_32G,BAFFIN_ULX,CPU_CFL:2.9
639-05869	MLB,2.9GHZ,HY-32,ULX,TS-2TB,X1190	ALTERNATE,BASE_BOM,BOM_8L,DEVEL_BOM,TS_2TB_PMLC,HY_32G,BAFFIN_ULX,CPU_CFL:2.9
639-05870	MLB,2.9GHZ,HY-32,ULX,SM-2TB,X1190	ALTERNATE,BASE_BOM,BOM_8L,DEVEL_BOM,SM_2TB_3DV4,HY_32G,BAFFIN_ULX,CPU_CFL:2.9

PAGE_NAME=J388_MLB SYNC_DATE=02/09/2017

PAGE TITLE
BOM-639 2.9GHz

Apple Inc.

DRAWING NUMBER 051-02643
SIZE D
REVISION 4.0.0
BRANCH evt-0
PAGE 144 OF 200
SHEET 129 OF 131

NOTICE OF PROPRIETARY PROPERTY:
THE INFORMATION CONTAINED HEREIN IS THE PROPRIETARY PROPERTY OF APPLE INC.
THE POSESSOR AGREES TO THE FOLLOWING:
I TO MAINTAIN THIS DOCUMENT IN CONFIDENCE
II NOT TO REPRODUCE OR COPY IT
III NOT TO REVEAL OR PUBLISH IT IN WHOLE OR PART
IV ALL RIGHTS RESERVED

Alternate Parts

PART NUMBER	ALTERNATE FOR PART NUMBER	BOM OPTION	REF DES	COMMENTS:
197S00046	197S00036		ALL	Epson w/ TXC
197S00047	197S00036		ALL	Kyocera w/ TXC
197S00048	197S00036		ALL	Murata w/ TXC
376S1080	376S0820		ALL	
152S00726	152S00592		ALL	
376S1053	376S0604		ALL	Diodes alt to Fairchild
353S00636	353S4037		ALL	
155S00007	155S0667		ALL	
376S1106	376S0678		ALL	Fairchild alt to Vishay
371S00127	371S00182		ALL	
152S00769	152S00659		ALL	
372S00016	372S00015		ALL	
107S00041	107S00039		ALL	
740S00041	740S0159		ALL	
311S00138	311S0436		ALL	
152S00725	152S00590		ALL	
152S00841	152S00238		ALL	
376S00219	376S00079		ALL	TI for Fairchild
311S00121	311S0398		ALL	
311S0596	311S0593		ALL	
353S3526	353S3528		ALL	
353S3527	353S3528		ALL	
197S00131	197S00116		ALL	
197S00117	197S00116		ALL	
197S00115	197S00116		ALL	
152S00398	152S00204		ALL	
152S00786	152S00344		ALL	
311S00165	311S00164		ALL	
128S00050	128S0351		ALL	
138S00047	138S00073		ALL	
353S01041	353S01042		ALL	
155S0665	155S00232		ALL	
740S00051	740S00050		ALL	
152S00724	152S00311		ALL	
155S0694	155S0387		ALL	
103S0321	103S0276		ALL	
740S0144	740S0118		ALL	
740S00028	740S0118		ALL	
138S00077	138S00035		ALL	
138S00093	138S00035		ALL	
138S00056	138S1100		ALL	
107S00015	107S00011		ALL	
152S00543	152S00484		ALL	
155S00018	155S0664		ALL	Murata w/ Taiyo
152S00359	152S00253		ALL	Chillisin alt to Cyntec
311S00118	311S0489		ALL	
155S00365	155S00191		ALL	
107S00070	107S0085		ALL	
138S0660	138S0684		ALL	
138S0846	138S0811		ALL	
155S0914	155S0897		ALL	
155S00190	155S0897		ALL	
138S00117	138S00071		ALL	
353S01346	353S01320		ALL	
376S00281	376S1147		ALL	
376S00230	376S00174		ALL	
128S00022	128S00018		ALL	
376S00304	376S1187		ALL	

311S0426	311S00007		ALL	
138S00229	138S00107		ALL	
353S01614	353S4159		ALL	
132S00202	132S00175		ALL	

PART NUMBER	ALTERNATE FOR PART NUMBER	BOM OPTION	REF DES	COMMENTS:
353S00878	353S00599		ALL	
371S00089	371S00085		ALL	
107S0248	107S0250		ALL	
107S00033	107S00034		ALL	
107S00103	107S00058		ALL	Cyntec w/ Yageo
311S00013	311S0508		ALL	Part wi
132S00064	132S0409		ALL	
128S0364	128S0264		ALL	Kemet w/ Panasonic
128S00058	128S00018		ALL	NEC w/ Rohm
107S00071	107S00053		ALL	
376S00014	376S0761		ALL	
376S00086	376S0761		ALL	
107S00044	107S00076		ALL	
740S00003	740S0135		ALL	
128S00070	128S00007		ALL	
740S00019	740S00007		ALL	Bourns w/ Polytronics
353S00852	353S4262		ALL	TI w/ OnSemi
138S0775	138S0860		ALL	
138S0789	138S0941		ALL	Murata w/ SS
152S00363	152S00048		ALL	
152S00415	152S00140		ALL	
155S00204	155S0731		ALL	
311S00060	311S0273		ALL	
128S00009	128S00007		ALL	
138S0738	138S1101		ALL	Samsung alt to Murata
107S00234	107S00235		ALL	
311S00156	311S00129		ALL	
155S0660	155S0513		ALL	
197S00120	197S00118		ALL	
152S00368	152S00269		ALL	
311S0271	311S00008		ALL	NXP w/ Diodes
311S00104	311S00091		ALL	

128S00039	128S00038		ALL	
128S0302	128S00038		ALL	
138S1103	138S0719		ALL	
376S00074	376S0855		ALL	
311S00180	311S00181		ALL	
152S00770	152S0857		ALL	
740S00033	740S00002		ALL	
155S00166	155S0391		ALL	
107S0249	107S0251		ALL	
155S00401	155S00067		ALL	
152S00369	152S00268		ALL	Cyntec w/ NEC
371S00074	371S0602		ALL	
138S0689	138S0701		ALL	
128S00087	128S00011		ALL	
128S00031	128S00011		ALL	
128S00026	128S00011		ALL	
152S00182	152S00703		ALL	
152S00705	152S00412		ALL	
376S00303	376S00012		ALL	
152S00864	152S00851		ALL	
311S00179	311S00166		ALL	
353S01505	353S01389		ALL	
353S01506	353S01404		ALL	
311S00057	311S0612		ALL	
377S0155	377S0184		ALL	
152S00403	152S00322		ALL	

311S00193	311S00192		ALL	
371S00170	371S00125		ALL	
376S00302	376S1038		ALL	

PART NUMBER	ALTERNATE FOR PART NUMBER	BOM OPTION	REF DES	COMMENTS:
103S00248	103S00247		ALL	8.06K 0.1% RESISTOR
103S00250	103S00249		ALL	18.2K 0.1% RESISTOR
116S00006	116S0175		ALL	0OHM RESISTOR
128S00062	128S00067		ALL	150UF POLY CAP
128S00069	128S00067		ALL	150UF POLY CAP
128S00065	128S00067		ALL	150UF POLY CAP
138S00097	138S0750		ALL	4.7UF CAP
131S00134	131S00041		ALL	12pF Desense:31561601
107S00101	107S00005		ALL	5mOhm :31560708
107S00087	107S00029		ALL	5mOhm :31560843
107S00086	107S00056		ALL	3mOhm : 31560937
107S00100	107S00057		ALL	2mOhm : 31561063
107S0240	107S0255		ALL	1mOhm : 31561401
107S00139	107S0178		ALL	220KOhm :31561213
128S0296	128S0487		ALL	47uF-PT : 31561532
128S00012	128S0487		ALL	47uF-PT : 31561532
138S0786	138S0705		ALL	Murata w/ Samsung
353S00832	353S00525		ALL	IMVP SA
353S00831	353S00519		ALL	IMVP VCORE
152S00782	152SS00772		ALL	IMVP CORE INDUCTOR
138S00105	138S00037		ALL	10uF CER : 31563978
138S0714	138S0713		ALL	10UF : 31564912
138S0648	138S0703		ALL	4.7uF CER : 31564224
138S0715	138S0732		ALL	1UF CER : 31565015
152S00845	152S00815		ALL	
138S00111	138S00036		ALL	20uF CER : 31563894
132S00012	132S0401		ALL	0.22uF : 31563715
138S00084	138S00060		ALL	47uF CER : 31564055
138S0739	138S0706		ALL	NEC w/ Vishay
138S0945	138S0706		ALL	NEC w/ Rohm
138S0641	138S0700		ALL	Murata w/ SS&Taiyo
138S0759	138S0762		ALL	
138S00049	138S0831		ALL	
107S00090	107S00055		ALL	
138S0863	138S0853		ALL	
138S00006	138S0835		ALL	
377S0077	377S0183		ALL	
371S00180	371S00077		ALL	NXP alt to Diodes
138S00104	138S0978		ALL	
138S00024	138S0986		ALL	
152S00434	152S1829		ALL	
197S00053	197S00050		ALL	Kyocera w/ TXC
197S00054	197S00050		ALL	NDK w/ TXC
197S00055	197S00050		ALL	Murata w/ TXC
335S00270	335S00203		ALL	Adesto for Micronix
155S00034	155S0706		ALL	Taiyo w/ Murata
353S00879	353S00754		ALL	
155S00203	155S0894		ALL	
152S00461	152S00112		ALL	
376S00146	376S1061		ALL	
152S00704	152S00413		ALL	
152S00199	152S00413		ALL	
335S00066	335S0946		ALL	
372S0186	372S0185		ALL	
311S00177	311S00178		ALL	
353S00750	353S00877		ALL	
152S00707	152S00689		ALL	
376S00282	376S1128		ALL	

VRAM ALT SUB-BOMS

685-00222	685-00221		ALL	
685-00223	685-00221		ALL	
685-00224	685-00221		ALL	
685-00225	685-00221		ALL	

VINSTIK.COM

PAGE TITLE: BOM Alt Table

Apple Inc.

DRAWING NUMBER: 051-02643 SIZE: D

REVISION: 4.0.0

BRANCH: evt-0

PAGE: 147 OF 200

SHEET: 130 OF 131

NOTICE OF PROPRIETARY PROPERTY:
THE INFORMATION CONTAINED HEREIN IS THE PROPRIETARY PROPERTY OF APPLE INC.
THE POSESSOR AGREES TO THE FOLLOWING:
I TO MAINTAIN THIS DOCUMENT IN CONFIDENCE
II NOT TO REPRODUCE OR COPY IT
III NOT TO REVEAL OR PUBLISH IT IN WHOLE OR PART
IV ALL RIGHTS RESERVED

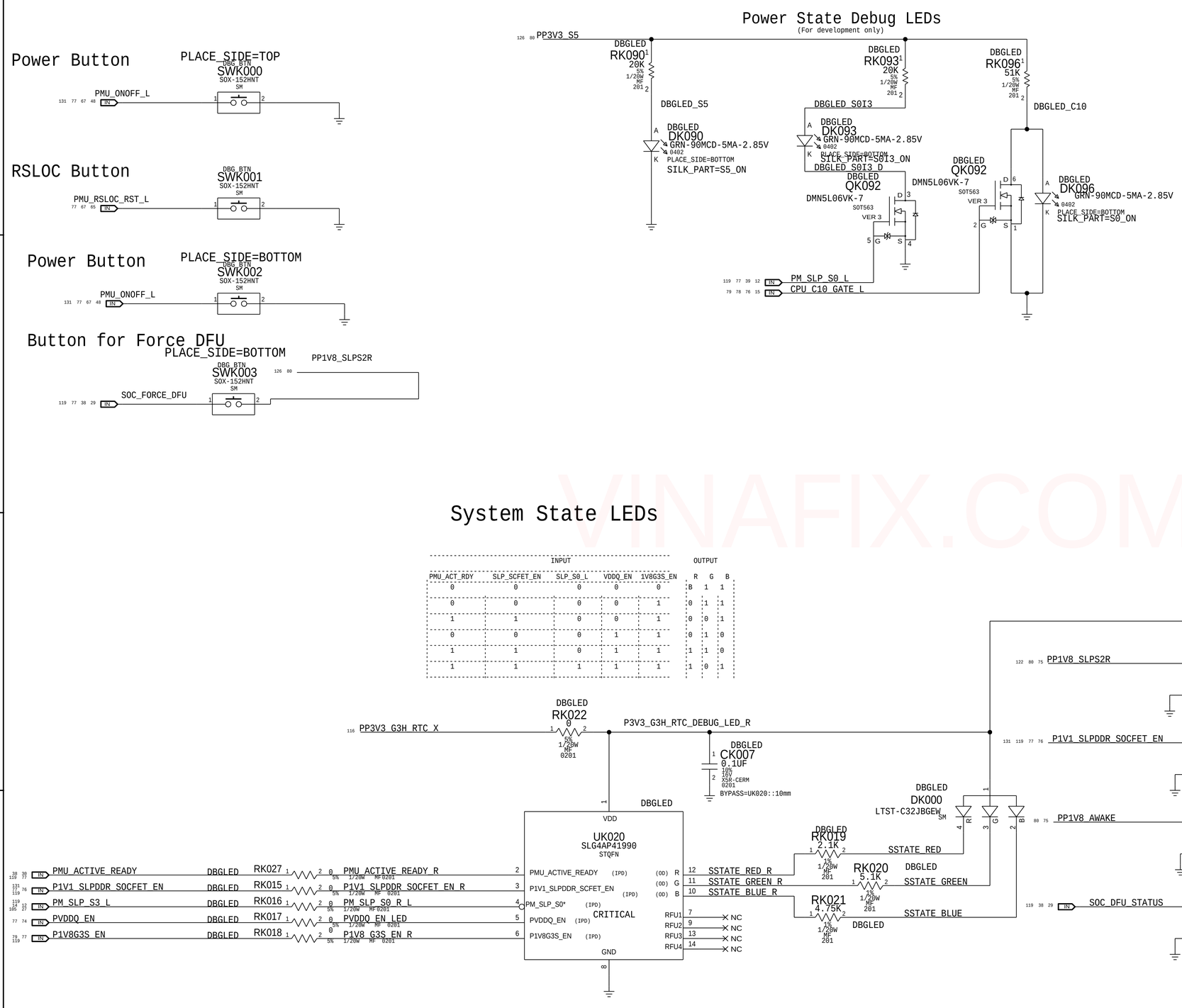

VINAFIX.COM

SYNC_MASTER=ADITYA SYNC_DATE=03/22/2017

PAGE TITLE
Dev Support

Apple Inc.

DRAWING NUMBER 051-02643 SIZE D

REVISION 4.0.0

BRANCH evt-0

PAGE 200 OF 200

SHEET 131 OF 131

NOTICE OF PROPRIETARY PROPERTY:
THE INFORMATION CONTAINED HEREIN IS THE PROPRIETARY PROPERTY OF APPLE INC.
THE POSESSOR AGREES TO THE FOLLOWING:
I TO MAINTAIN THIS DOCUMENT IN CONFIDENCE
II NOT TO REPRODUCE OR COPY IT
III NOT TO REVEAL OR PUBLISH IT IN WHOLE OR PART
IV ALL RIGHTS RESERVED